Bedini

Bonus

Buch

Teil 4

Übersicht

John Bedini is the founder of Bedini Electronics and the proprietary inventor of this patented technology. John is an alternative energy inventor and a developer of electrical amplifiers. John has also done research and development into suppressed alternative medicine related to the work of Raymond Rife. John's work on alternative energy is originally inspired and based on the ideas of Nikola Tesla.

John Bedini speaking in the educational series energy from the vacuum

It may be hard for some to conceive but John has had a free energy generator since the 80's.

More suppression has happened: *The Kromrey Converter. (replication based on Raymond Kromrey's US Patent #3,374,376) John Bedini explains in the full length DVD everything you ever wanted to know about this proven overunity generator. And demonstrates it on the bench. Also included is archival footage of the one hour Bill Jenkins Town Hall Meeting in Los Angeles* ***in 1984 in which John Bedini unveils it for the first time to the public****.*

John pictured next to the The Kromrey Converter.

Well, John's manufacturing and production team was rapidly infiltrated and destroyed, and M.I.T. bought up the last remaining twelve operational units from John, never to see the light of day again, so you can draw your own conclusions.Well, here it is, John Bedini's legendary "G-field generator" from the early 1980s in all its glory running on the bench and putting out more power than John is putting in.And ejecting a stream of freezing cold air from its interior, where one would " normally" expect heat would be produced and dissipated. In this DVD John Bedini, painstakingly traces the "G-field generator's" pedigree and history all the way back to the late Professor Raymond Kromrey, and John then presents the theory, the circuit diagram, what to do, and what not to do, to build one that works.

Watch, too, how John shows the motor running under load with the circuit only completed by a strand of wire the diameter of a human hair an impossibility with conventional EM energy.For the practically minded, this DVD is all anyone could ask for if one was contemplating building an overunity electrical motor.John's manufacturing and production team was rapidly infiltrated and destroyed, and M.I.T. bought up the last remaining twelve operational units from John, never to see the light of day again, so you can draw your own conclusions.Also included is the archival footage from the celebrated 1984 "Town Hall Meeting" with Bill Jenkins, in which John springs this technology on an unsuspecting world. Energy from the Vacuum Trailer

Recently John has disclosed a Modified Tesla Switch Solar Charger, but can be used on the motors also.**53 watt in 148 out.**

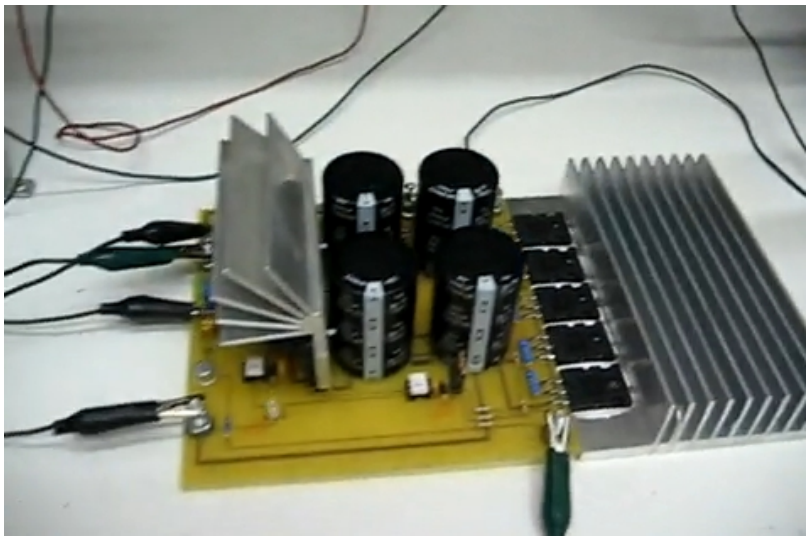

Modified Tesla Switch Solar amplifier Charger from Energex

John has altruistically released information related to his alternative energy technology into the public domain. These disclosures include the “School Girl” or SSG (simplified school girl motor) and the Bedini, Cole “Window motor” motor circuits. **John’s open public disclosures of the SSG concept are intended as an educational tool for the public to observe and test the effects of battery charging by this unique process**. This method has so far appeared to be the most efficient battery charging circuit in the world.

John’s process also shows an additional longer battery life and run time effects not seen in the conventional method of charging batteries. This technology although has been around for many years is only just starting to come into public awareness. John has had allot of interference over the years. Further references to the suppression .

John systems demonstrate the principle of “radiant” energy (Longitudinal –scalar wave) charging of batteries. This is where the voltage potential is used and is mostly free of electron current. **This process is a cold charging.** The batteries charge and stay cold, therefore, heat doesn’t deteriorate them internally over time as conventional chargers do. Here is the R charge web site explanation of the process.

John Bedini has many “Free-energy” or highly efficient patents, working devices and feasible undeveloped concepts but no international recognition, mainstream public awareness, and acceptance of the value of his insights. John is not without his loyal supporters. Jeff (Bit's-n-Bytes on the forums) and Rick Friedrich are keeping the balance of support by doing OPEN SOURCE WORK. **This is needed to ensure competition which will create affordable prices in kits and for security (public knowledge) of the technology. They are working on No budget.**

Jeff (Left) and Rick (Center) next to the Bedini 10 coil energizer

Working alongside Rick on no budget, Jeff has put the all money up front to test an OPEN SOURCE self running Bedini 10 coil creation.

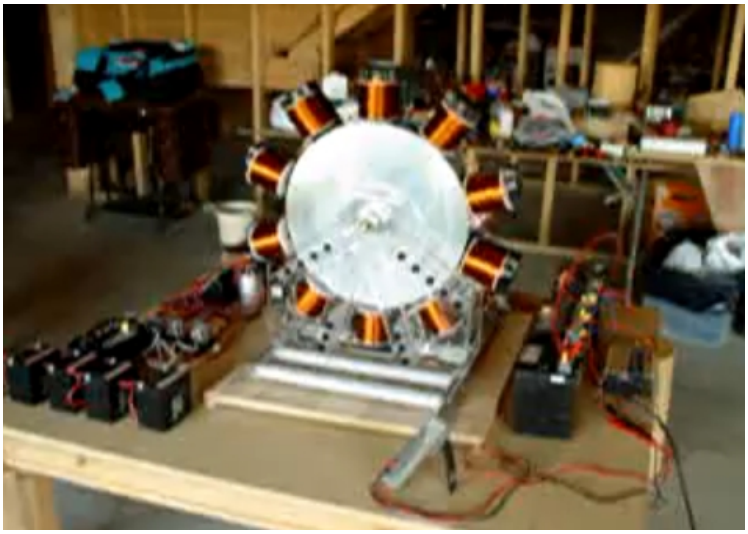

Screen shot taken from the video

In the following Self Running Bedini 10 Coiler- Grid Tie Video Jeff is illustrating the Grid Tie (power back into the house) from the 10 Coiler. **This has significant ramifications to advance education. You can track the research and development progress of this work in the** Bedini 10-coil **energetic forum thread.**

The Nonprofit organization Panacea-BOCAF intends to support open source engineers working with the John's and other suppressed clean energy technologies. These engineers require grants, resources, faculty recognition and security. All this can be created in Panacea's proposed granted research and development center. For those able to help this effort, please Contact us.

John works closely with open source engineer Rick Friedrich. Rick has worked on improving what John has given us and discloses his results open source. If you find the following course information

John and Rick have given to the public of any use, please consider supporting Rick and John's products**. They are second to none**.

This technology includes, but is not limited to, lead-acid starter batteries, deep cycle batteries, gel cell batteries, Ni-Cd batteries, and Ni-MH batteries. Testing on other battery chemistries is currently underway.

Rick has also done kits of various Bedini circuits. Rick is currently attempting to do R and D on bigger fans for all, he releases his entire results open source, and is currently looking to convert and test this Fan. Rick is unable to afford to do every ting at capacity at this time. If you are able to help Rick in any way please either contacts us, or Rick direct.

John's site – R charge for the solid state chargers

Rick's site – For Bedini Fan kits and more

From Rick's web site

The Bedini process is very much underrated. **Bedini's Free Energy book shows how the solar Bedini system can lead to much more useful energy being extracted from the PV panels**.

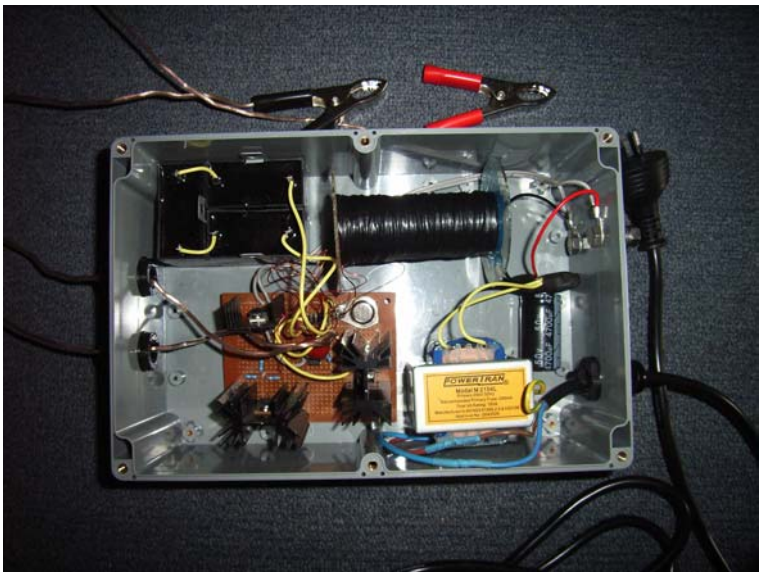

Panacea's Solid state charger as built from the Free energy generation book

Panacea was able to charge a battery on 4 watts using this method. This technology has already been applied in [The Panacea Farm Conversion - The John Bedini Segment](). This charger was also able to revive a 4 year old dead lead acid battery.

Note- Why does a solar panel drain a battery if there are no diodes? Very Simple: A Solar Cell has an Internal Resistance. Apply an External Voltage to it (From a Battery or Other source), and It Draws Current. Depending on the Applied Voltage and Current draw, this can also destroy the Solar panel. The Diodes is required to prevent the Reverse Current flow. (Some Solar panels have a diode built into the panel.)

When using the SG to charge batteries with solar panels, you must match the impedance of the panel to the SG. To do this you need capacitors at least 20.000 uf 75 volts we run the SG all the time this way. Set the SG to pull over 1 amp of current by setting the base resistor. The next question, is it a multi-coil machine, if so set it to pull over 5 amps min.

The machinery to do this is anything but cheap, which in fairness John Bedini acknowledges. This is why John says there is no free energy. He has put LOTS of money and time into the R and D. The SSG and Fan device uses high voltage impulses to condition new and desulphate and recondition old

batteries. This process can coax longer life cycles out of new batteries and recondition / bring back to life old batteries (batteries that can no longer be charged by conventional means). The SSG device can be constructed in many forms,, from very small to very large multi coil systems. A variation of the SSG device can be used to charge large banks of batteries. A variation of the SSG device can be used to help power itself while charging batteries.

There still remains allot of research and development to improve the system. Battery swapping, the Bedini Watson flywheel, window motor and most impressive is the recent replication by Rick Friedrich which shows a "self runner". This is where Rick has recovered the mechanical power of the rotating bike wheel and directed it back to keep the battery charged.

Many open sourced engineers have altruistically donated their time and effort into improving the system. This can be found by putting in "Bedini", "window motor", "self runner" or "SSG" in you tube and or Google video. This is an example of how open source engineers have worked with proprietary inventors and improved their system. There exist political and economic conditions which john has been subjected to, (energy suppression) - not to mention scientific dogma which prevents the majority of the general public's access to the research and development into these types of systems. Not to mention media suppression as appears to be the case with myth busters. It is important that open source engineers continue working on improving this discovery and make use of what John has given to us all.

What makes this technology an exception to every other aspect of current technology is that although it has been tested and made to work in some practical applications, it is yet to be accepted by the mainstream ethos and is not taught in any textbook that we have today.

We have been told for around 100 years that there is only one way and not to question it, well it's time we do. John has chosen to learn a different science unknown to most people; this is like a painting that someone else may not understand, so they find no value in it.

Mainstream science has given you everything at a high cost such as solar cells, wind generators, waterpower and so on, these are not free- energy systems, but people believe that they are, forgetting all the setup costs, they never pay back anything as they fail all the time, mostly the batteries. John's machine is a mass-less output system as he has said many times, John has said how the machine works. You must pay for the trigger or you can not have the energy, Tesla's system worked the same way, not free as someone had to pay for the trigger to the transmitter.

The systems people seek require one trigger signal and then the machine can run itself after that. John states as a direct Quote – *good luck, as you do not have the correct materials to make that happen. People make mysteries out of everything not the inventor, he just tries to explain it the way it works in his mind, and you are free to choose what you believe in.* ***Most people do not even understand that magnets hold the answer as they are the real free energy machines; one charge and they run forever. If people could see where the energy is coming from they would be shocked as they would have nothing to measure it, it's only measurable after it's converted by the material in its makeup.*** **–**End quote

When discussing this technology on a public forum**- it is important to moderate against dis-informationist.** The dis-informationists have been successful already in repelling john away from one of his own groups. Furthermore, it got so bad that Sterling Allan (group moderator) came in and shut the whole thing down. In the mean time, john still posts on Rick's private members groups.

We continue to make great progress and are happily working together to further advance REAL scientific effort. Many experts posting to help one another, it's really great. The thing john said in the closed down SG groups was – "you can control the Bloch wall of the coil" this is hugely important and is the key to creating the asymmetrical systems. You need to take the dipole OUT of its perfect balance, at least momentarily.

Note- Gel cells are not good batteries. While they can be used we do not recommend them. Rather flooded lead-acid true deep cycle types should be used.

Description

Panacea's replication of Rick's 'Bedini's fan kit motor

John Bedini's Radiant energy technology is based on Concepts originally discovered by Nikola Tesla, John's process remains unknown by the mainstream. Applications include the most efficient Solar battery charging circuits in the world, curricular, house power and resurrection of dead batteries. The Bedini technology is a perfect tangible example of reproducible results which show Tesla's Radiant energy technology.

Quote-*The real question is does this machine charge your batteries, that's the real question. Does the energizer start every time you push it, or does it do nothing?' The purpose of this machine is just a teaching tool, there is no free energy to be found in the energizer, only in the charged battery if done right, but the mechanical is free that's the bonus with no more current input. If the trigger is done right the battery will charge with the lowest current input to the machine. The machine was designed to make it very simple instead of using timing sensors; you can do this if you want.*

The only adjustment you need is to adjust the base current resistor and that's it. The energizer then runs very fast. These pulses trigger the chemical in the battery to do a fine plating process window, this is how you get the extended time out of the secondary battery, that's where the energy is. It's funny no one has applied this to anything else. Done correctly you could apply this to an inverter and run the load while you charge another battery- John Bedini End quote. Back round information- Panacea's page on John Bedini

Insights into the energy transformation process will be discussed in complete detail in the faculty information section of this course document. The Bedini process is typically used to charge lead acid (Gel cell) batteries. Other battery types can be used. There are many variants of the Bedini battery

charging process. **These can be run directly from a solar panel or a battery**. Also an earth Rod can be used with a solar panel. The first configuration is the SSG (simplified school girl motor).

SSG (simplified school girl motor)

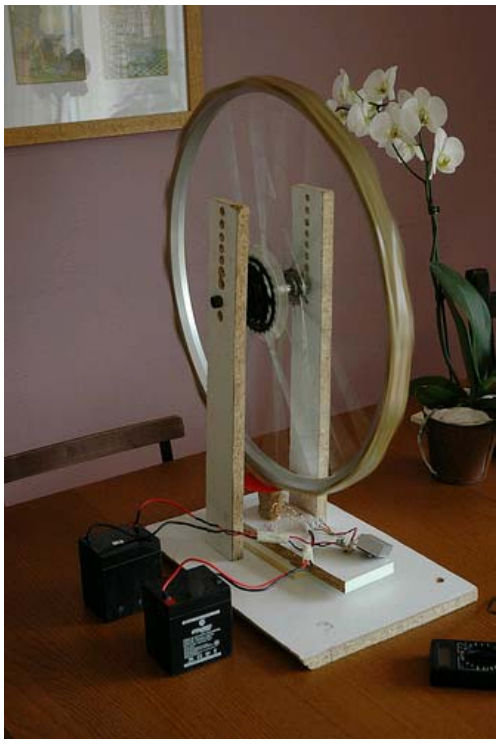

Imichoux's SSG replication

The SSG is typically comprised of a bike wheel for a rotor and has simple circuitry. The Bedini SSG charging system does not operate the same as a conventional motor does, the Bedini process operates primarily as a mechanical oscillator. This oscillation involves interactivity of a coil and magnet which creates a high voltage spike. When the magnet passes the coil the circuitry triggers a signal in order for the right timing to capture the 'pulse' so that a battery bank can become charged.

A Video example of Ren's SSG -24 volt Bedini Cap Pulser

Due to there being a mechanical oscillation, some consider this mechanical part of the SSG as free. Regardless, the SSG is low torque, but there is some mechanical that can be recovered without stalling the rotor. If this mechanical is not used, then it is a loss, but it is there and has already been "paid for".

Above is Lidmotor's practical example of using the SSG output – Solar Bedini SSG running a fan while charging batteries.

Use it and your losses are reduced. If you just load your rotor with drag (be it via bad bearings, a piece of iron, aluminum or lead near the rotor) then you are just introducing a loss that can't be recovered. **A generator coil, and or slave coil can provide some recovery, either passively or pulsed. An advanced variant is currently Rick's self runner circuit (described in the replication section).**

It is a common understanding that the rotor offers a 'free' trigger. When the SG rotor is loaded for mechanical recovery, then the device has to be re tuned for its sweet spot (low current in- to high charging rate out). This is why sometimes, if an unloaded rotor isn't tuned right, adding a load can actually decrease the input current and the rotor speeds up, because the loading pulls the rotor into its sweet spot. Good bearings are essential if any mechanical is to be tapped.

From this operation, one learns periodicity and how to use a compression point with an inductor to generate a higher voltage that can be deposited into a battery directly or into a cap **to culminate into a higher charge potential before being released**. One also learns how to tune the trigger method with resistance (along with other trigger methods should one go that route). **This effect is happening in the chemistry of the lead acid batteries", the energizer is simply the trigger or waveform provider that shapes the impulse to cause the proper effect to be seen.**

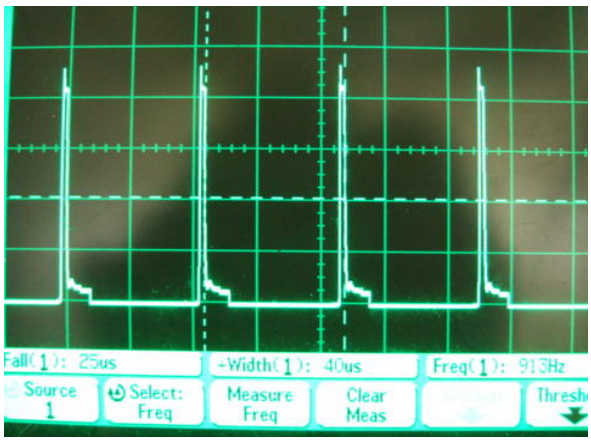

Wave form scope shot taken from a Solid state SSG

Quote –*That waveform can do wonders not fully explored yet. That is Tesla's time wave that he talked about.* –John Bedini

From years of reading JBs work, one notices that he constantly mentions and stresses the correct waveform. It has also been discovered that the battery chemistry changes, with the correct waveform. The correct waveform causes the sulphation to be reduced and an oxide reaction to take place in addition to the normal sulphate-reduction reaction.

One must remember not to confuse the normal sulphate-reduction reaction with the reduction of bad sulphate accumulations. It's great that everyone wants to experiment with variations of JB's design. **However, they must keep in mind that the desired end-result is the production of the correct waveform**. Also some report -*I've only seen a benefit using the parallel capacitor for completely dead batteries*.

The waveform results in the production of an oxide-reduction reaction in the battery in addition to the normal sulphate-peroxide reduction. The waveform changes the battery chemistry. A correctly constructed multi-coil energizer also has the added benefit that it allows an inrush of Aether energy to do all the "work" It is believed by some that the definition of "work" in this case is allowing the Aether to power the lead tetroxide-lead oxidation reaction.

The energizer in the SG form will show the different chemistry and is a learning tool. It works well for conditioning batteries. **The multi-coil machines will, when properly tuned, allow a big enough inrush of Aether energy that the batteries discharge more energy than was input to the drive battery**.

John Proving his system is able to provide enough power to run a house!-Source

This is the essence of the "regauging" that Bearden talks about so much. **It is believed that any experimenter trying to duplicate the work of JB needs to keep firmly in mind that the waveform is the final goal**.

The output from the SSG contains a HV component spike combined with a small current component. This current component is the "few electrons" that JB says we need and what is referred to by some as the threshold current. This threshold current puts the battery into a charge state, rather than its usual resting self discharge state. **As the battery conditions (after many charge and discharge cycles), the internal resistance is lowered, (the plate surface area is increased as well) meaning that we need even less threshold current to place the battery into the charge mode**. Over all this process is also a good basic experience with DC power sources in impulse current configuration.

John has suggested testing the output of an SG machine using a 1ohm resistor. If you measure less than 1V on the output then clearly there is less than 1W actually charging the battery as far as conventional understanding is concerned. How is can 1W charge a battery at the measured charge rate?

It cannot. Rick has proved this already, don't take our word for it, try the experiment for yourself.

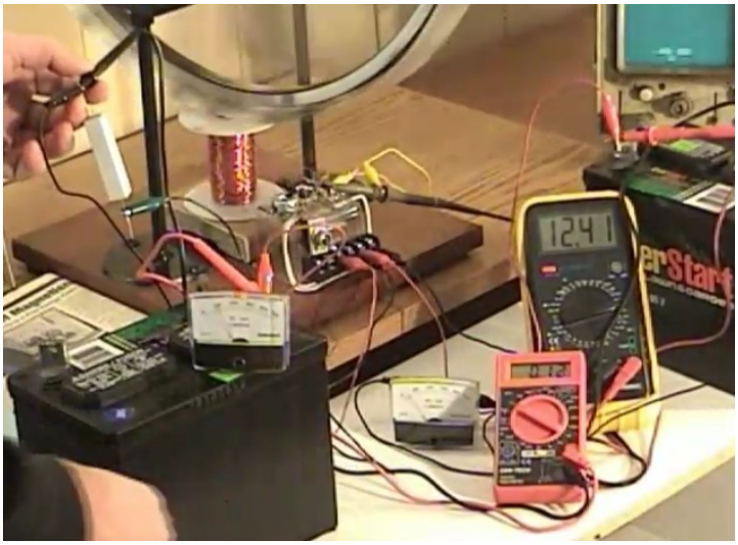

Above is Rick demonstrating the one Ohm resistor test, you can purchase this video from **Rick's web site**

In this video Rick put a one Ohm resistor on the output of the SSG. He tested the temperature of the resistor before doing this, which was at 63/ 64F. Measurements done by a volt and analog amp meter showed the following results.

Current showed 14 mili amps by an analog meter

Voltage was 0.16 volts at peak

Temperature stayed the same

Do the math with the watts!

Conventionally this is not enough electron flow or WATTS to charge a battery at the charge rate that is occurring in the battery. RADIANT ENERGY EXISTS!

The final proof of this, can be seen by the temperature measurement of the one Ohm resistor when loaded, it did not fluctuate, or if current and or wattage was responsible for charging the battery, you would have heat as a result, **even though a pulsating system, if you had a constant current situation, the heat would be PRESENT and be the tale teller so to speak**.

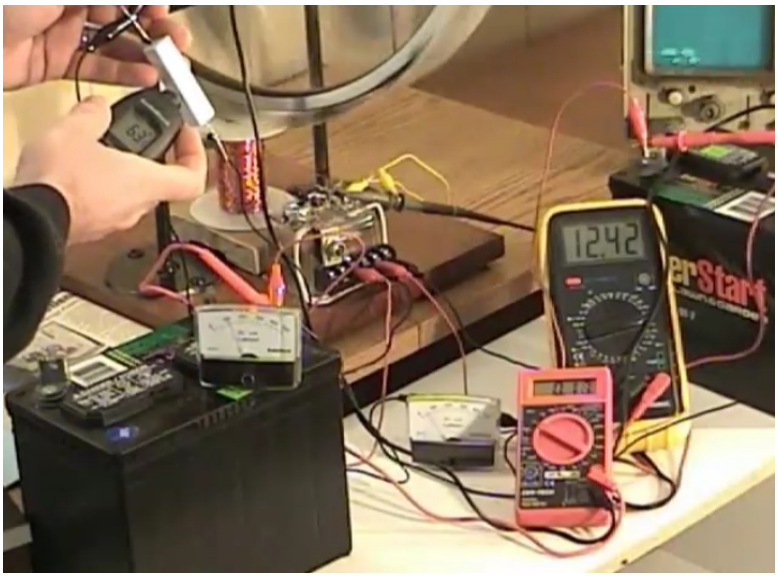

Temperature test of the one Ohm resistor by Rick

This certainly suggests that something not adequately explained conventionally is going on. The voltage potential is charging the battery not current. John Bedini has also suggested using a neon lamp in line with the SG output to show the spikes going through as a further indication of what is going on. If you take the SG to be a learning tool, John Bedini tells us then by using pulsing technology with lead acid batteries there is something to gain.

Rick's Fan kit

Panacea's replication of Rick's Fan kit

The Fan kit version of the Bedini technology is basically a cap pulsar with two power circuits; this is far advanced from a basic SSG configuration. The fan kit circuit makes use of the free mechanical oscillator part to perform real work with the fan (although you can attach on fan to the SSG circuit). **If you calculate the input cost to the work being done by the fan and then add the battery charging energy (up to 4 batteries), you will then have a process like no other circuit in the world. TRY IT FOR YOURSELF.**

Let's discuss this fan kit unit a little. We are able to run a fan which demands a certain amount of energy plus we are able to energize a second battery(s) to boot. If one is too use standard fan motor it will run down a small battery in no time at all - However the converted Bedini fan motor will be much more efficient and last much longer at good speeds plus- it sends a signal downstream to a lower battery(s) and recharges it all for the same cost. Rick has already put this concept to practical use; check out his ceiling Fan from Rick's web page.

Panacea's Fan kit video's

http://video.google.com.au/videoplay?docid=2135006226202052080

http://video.google.com.au/videoplay?docid=7749636557807263534

Multi Coil system

So far the multi coil part of the technology has been developed into the most practical system for modern use (discounting R and D). This is not to taking any thing away from the potential of the other versions or systems; this is based on John Bedini himself showing a 10Kw house power circuit that needs not external power!.

John Pictured next to his 10KW house power system

Pictured above is John next to his multi coil system capable of powering your house and replenishing the batteries with no external input! IE- Solar or wind. This system does work THE MOST EFFCIENT with solar and wind. But can you buy it today? John stated publicly on the energy from the vacuum series, that he cannot sell this.

Ask yourself why! John's hands are tied, we must help him.

Further information on john's house power system can be found at:
http://www.icehouse.net/john34/bedinibearden.html.

Jeff's promising results

Jeff's Multi coil system

The following YouTube - Self Running Bedini 10 Coiler- Grid Tie Video by Jeff is illustrating the Grid Tie (power back into the house) from the 10 Coiler. **In this Video Jeff shows the closed system generating half an amp at 120v, whilst charging itself.** This really is a moment in history. You can the R and D track progress of this system by joining the energetic forum and visiting this thread **Bedini 10-coil**.

Some favor the multi-strand approach where all wire strands are wound on a common spool (SCMS). This overcomes trigger timing problems which can be difficult to overcome with multi-coil working (MCMS). This method can be used for both mechanical and solid state energizers.

Rick Now does 3 pole multi coil kits and now 10 coils systems. Rotor is aluminum. Coils are 1.5" by 1" diameter. 1/4" core. Small but still a good charger and motor. Magnets are small neos, small enough to not be too strong to cause problems. I was going to do ceramics, but the original had neos and John said that they were far enough spaced apart to not cause problems. They are sunk in the aluminum, and the gap to the core is 1/4" away. Also, the generator core is adjustable so that the LED brightness can be changed, especially considering if you increase the primary voltage above 12V. The machinist spun it up to an estimated 45,000 rpm in the shop, so it has some real potential.

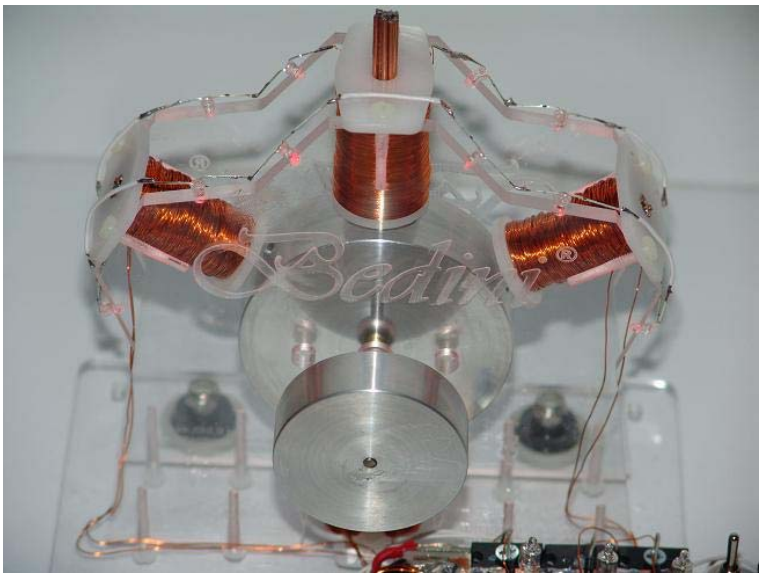

The Bedini pendulum or "Tesla gravity motor replication"

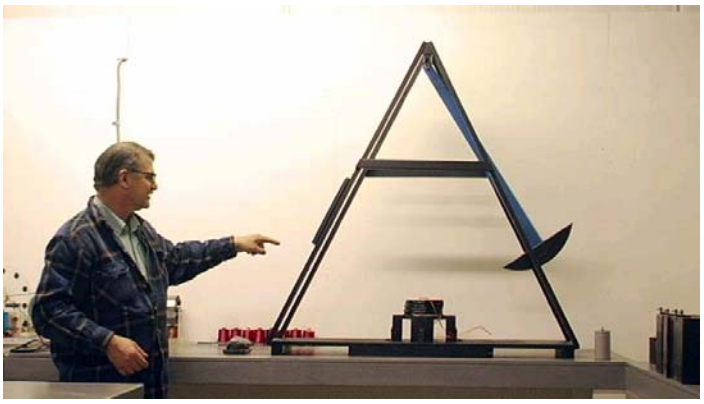

http://www.energyfromthevacuum.com/Disc2.htm

The following report was given to us by Peter Lindermann. *Referring to Pendulum variation of Johns technology as seen in the energy from the vacuum DVD. This system it is designed to match the impedance on the batteries. All of the machines on the energy from the vacuum were test machines. Each one shown was designed to TEST something. Even the big 10 pole. Bedini said he wanted to see if it increased output with a much higher input via a big machine, it did not, there are hundreds of possible machines, some require some current. The machines in the video are now very old. The cole switch is from the 80s. If you study Bedini, he keeps moving so what we see are the left over (but purposeful) test machines he built to test a theory and move on. He has also said Solid state is the way to go, so everyone builds it and seems disappointed. Well, again, it is one way to do it, and TEST it, and figure out how it (the energy) works.*

John and I built all three pendulum machines together. I was there. The circuits were test circuits based on John's unique insights into this process. The circuits were John's, but I helped build the frames, pendulums, and coils. I also tested some of these units for weeks. John has not disclosed the circuits he used so I can't either. I will say that they were similar to SSG circuits, but not exactly the same.

The system sent charge to both the run battery and the charge battery. I ran several tests where the run battery did not discharge AT ALL over a 4 day run. The charge batteries LOOKED LIKE they were

charging very rapidly. The problem with the system was that the circuit returned ALL of the electron current to the run battery and sent pure Radiant Energy to the charge battery. After a while, the charge batteries all DIED!!!!!

This helped prove Bearden's Theory that you need at least A FEW electrons in the system. Pure Radiant Energy does NOT charge batteries. All of Tesla's circuits show Radiant Energy lighting light bulbs and running motors, but NEVER charging batteries. Now we know why.

The circuits are very counter-intuitive and you will never figure it out by guessing. The biggest energy effects came from the smallest unit. It was impossible to determine the energy gain in the system because it changed with the load impedance. In the end, the Pendulums proved Tesla's electricity fractionation process is real, since we were able to continually produce Radiant Energy impulses from a battery system that did not deplete. But nothing practical was ever demonstrated. As a battery charger, it was a failure. However, as a test apparatus, it taught us things about Radiant Energy that we had only been able to guess about before. The pendulum test set-up for the magnetic gate is not related to the later work on the electric pendulums.-End

A few replications have been done of this pendulum circuit and are included below.

Bedini/Cole Window motor

Window Motor, Bedini/Cole –this motor of John's has been on the same batteries for over 15 years!-Source

Another Variant of the technology done by john and Ron Cole, this is considered by some as the most advanced part of the process, as it has the potential to run for OVER extended periods of time (that's putting it mildly). Rick is also providing kits and parts for this on his web site.

Solid state

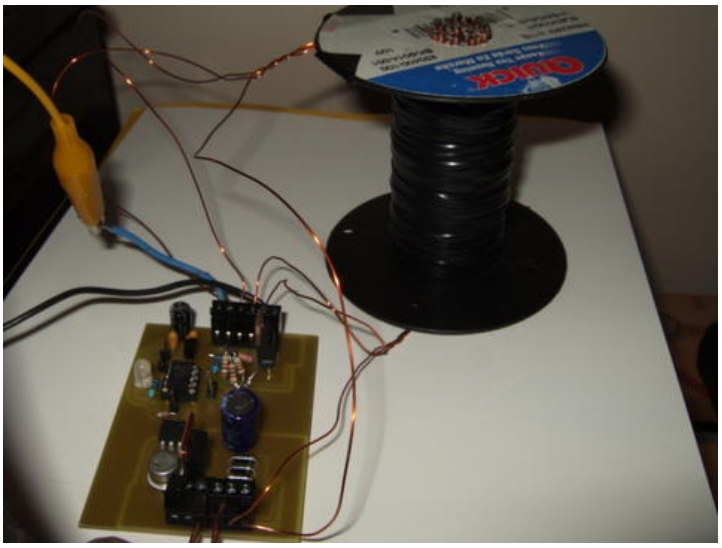

Solid state built from the Free energy generation book

The improved and original solid state schematic can be found in the Free Energy Generation book by Tom and john. This eliminates the mechanical oscillation part of the circuit. **Some consider it to condition batteries quicker than the SSG**. This circuit is a perfect one to bring back dead lead acid batteries and charge them. **Solar use is encouraged**. Rick Also does kits on these you can view them on his website.

Jim Watson machine

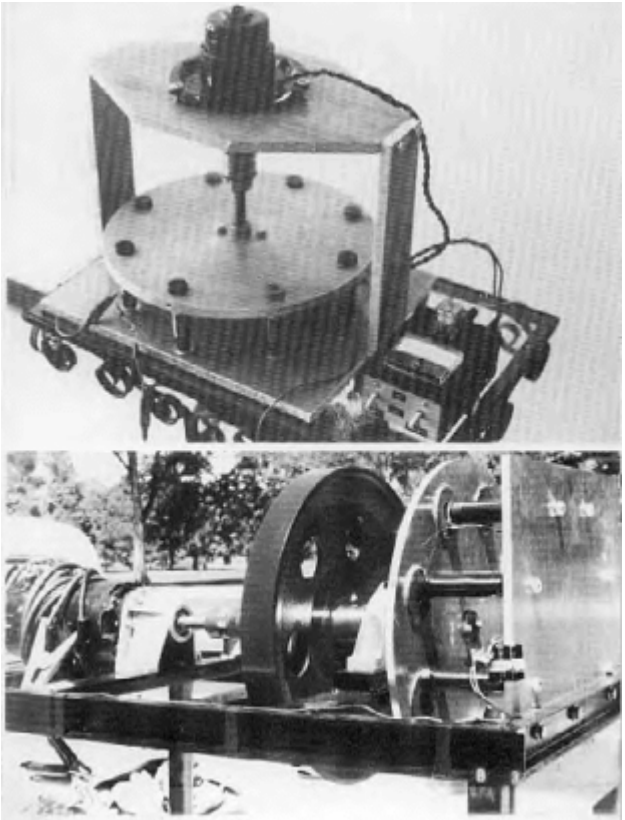

A smaller and a big 12-KV Bedini-type converter built by Jim Watson, presented at the Colorado Springs Tesla Centennial Symposium.

Jim Watson's 12KV Bedni type converter (Bottom pic) presented at the Colorado Springs Tesla symposium.

This system was assimilated from John's ideas. The system had a pulse motor, flywheel and energizer. It was suppressed; more information can be found on John's Panacea page. Replication ideas are included in the replication section below. The following is by Peter Lindermann.

There is another interesting feature of the Watson Machine that is usually overlooked, and that is the motor. The salvaged aircraft starter/generator unit was essentially a system that had a wound field and a wound rotor, with a brush commutator. It was probably SERIES WOUND. This means that when the motor is offered electric current from the battery, it will produce bursts of TORQUE. It also means that when the motor is disconnected from the battery, it will produce NO back EMF and NO DRAG except for the brush friction.

If you attempt to use a DC motor with a permanent magnet field in this machine, it won't work, because these motors ALWAYS produce reverse currents into the shorted turns of the rotor windings, and therefore, always produce DRAG when not connected to a power supply! You can see this behavior quite easily when you try to spin the shaft. A permanent magnet field DC motor will NOT free wheel when disconnected from power. They stop very quickly due to their internal short circuit on the rotor!

For those of you who have seen my DVD Electric Motor Secrets, you may also understand that if this motor/flywheel system is run at a speed that is significantly near the top speed of the motor for its excitation voltage, the current draw will be greatly reduced, because the internal back EMF of the motor will be approaching maximum. There are other subtleties to this aspect of the machine that only become apparent after significant experimentation with motors.

With the permanent magnet induced, inductive collapse "energizer" driving into a capacitor, the back EMF drag of the generator section drops to a very low value because the system is encouraged to produce VOLTAGE instead of current. Current production is the ONLY aspect of electricity that causes DRAG according to Lenz Law, not voltage.

This is the first machine that Bedini developed for the charging of a battery from a capacitor dump. Its a brilliant little arrangement because the capacitor never drops below the battery voltage, so when it is disconnected from the battery, 100% of the energy it receives from the "energizer" is added to the capacitor at a voltage ABOVE the battery voltage. So, the system can produce 100% of its energy at reduced back EMF and make ALL of it available to the battery.

With the flywheel storing the torque, produced by the motor pulses and consumed by the "current production" of the energizer, the "window" for understanding HOW the machine can go OU is revealed. This machine cannot work without a proportional flywheel and a good, low friction bearing system.

The secret of the machine is in "managing" the back EMF production in both the motor and the generator. The motor MUST be able to operate in a pure "free wheel mode" in-between the torque pulses it contributes. The energizer MUST charge into a capacitor so its output is biased toward VOLTAGE production and away from current. This reduces the back EMF drag (reverse motoring effect) it produces.

When all of the components are proportional (tuned) and the system gets up to operational speed, the losses go to minimum and the COP goes above 1 and the battery starts charging. That is my understanding of the machine.

Similar to the Watson machine

It's called the Carousal Electric Generator and is claimed to be OU (patent 5625241)U.S. Patent: 5625241 - Carousel electric generator - April 29, 1997

http://www.everypatent.com/comp/pat5625241.html

Imhotep radiant oscillator circuit

Lidmotor's -Bedini Fan fused with the Imhotep radiant oscillator

More background on this can be found on the panacea university site. Basically this circuit was originally intended to operate CFL lights. This has now been adapted to run with the Bedini fan and as a cap pulsar battery charging circuit. A brief description and full replication instructions are described below.

Tesla's lighting methods - Imhotep's radiant oscillator (PDF)

Tesla Switch

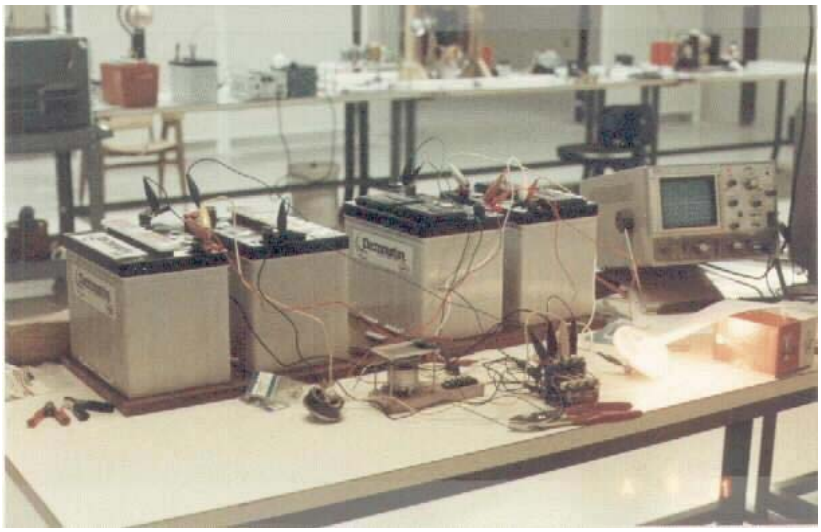

This is a picture of the Tesla Switch built by Eike Mueller the load is 350 watt quartz light-Source

John also collaborated with Ron Brandt (a former college of Tesla) to build the "Tesla switch". This has SOME similarities to john's systems but it is not yet completely understood yet. A research paper on the Tesla switch will be included on the Panacea university site soon please check for updates.

Replication

Quote-*I have harnessed the cosmic rays and caused them to operate a motive device. Cosmic ray investigation is a subject that is very close to me. I was the first to discover these rays and I naturally feel toward them as I would toward my own flesh and blood. I have advanced a theory of the cosmic rays and at every step of my investigations I have found it completely justified. The attractive features of the cosmic rays are their constancy. They shower down on us throughout the whole 24 hours, and if a plant is developed to use their power it will not require devices for storing energy as would be necessary with devices using wind, tide or sunlight. All of my investigations seem to point to the conclusion that they are small particles, each carrying so small a charge that we are justified in calling them neutrons. They move with great velocity, exceeding that of light. More than 25 years ago I began my efforts to harness the cosmic rays and I can now state that I have succeeded in operating a motive device by means of them. I will tell you in the most general way, the cosmic ray ionizes the air, setting free many charges ions and electrons. These charges are captured in a condenser which is made to discharge through the circuit of the motor.* ***I have hopes of building my motor on a large scale, but circumstances have not been favorable to carrying out my plan***. End Quote Nikola Tesla Brooklyn Eagle July 10, 1932

We suggest powering John's systems from PV solar panels, and then the input is free (ignoring the cost of buying and installing the PV panels of course). You can add other environmental inputs such as ground rods and aerials to boost this as well or even use electrets. Earth batteries will also be discussed. **Please read the PDF- Starters Guide BY RICK F, RICHARD L., AND RS in the replications links below to see specific differences between the cap pulsar's to the normal SG**.

Simplified School girl –SSG

John has stressed that the SG is a 1 to 1 charger, what you put in; you get out, no OU. But when you charge up to 4 batteries s from one battery that is a matched set, you get up to 4 charges for the price of 1, so long as you follow the battery rules.

There are many different setups and they all vary in efficiency. By adding more batteries you get more total useful charge over time but not the equivalent of 100% per battery added in most cases. This all depends on the size of the batteries and their condition as well. Using two small batteries (one primary and one secondary) you usually do not get 1 to 1 charging, but more like 80 to 95% recovery. But when you place larger batteries, and several of them, on the secondary then you should get at least 1 to 1 charging in the sense of total work that can be done by them verses total work done by the primary. On advanced and well-built systems you may get 1 fully discharged primary battery for 4 fully charged secondary's.

1. Never discharge a battery or bank, faster than C20, anything less is ok up to a point, and on these small bats C24 rate is more like it.

2. Never go below 12.00V on the small bats, starter bats and marine deep cycles, and 10.5V on the true deep cycles golf cart, solar Bats, etc.

3. Because of the current less radiant spikes charging the bats, they will start to last longer at that C24 rate, and charge up faster every time, once they have been through a few cycles and conditioned.

4. Your coil or coils should match your matched set of batteries. If your C24 rate is .4 amp, than you can't pull a very big coil or only one coil, if the C24 is more like .8 amp than you can pull a larger wire coil at .8 amp, or 2 smaller wire .4 A coils that at their higher rpm might only pull .6 amp between them, if you have a big marine deep cycle batts it's C24 at something like 1.2 amp than you can pull a really big wire coil like Roamer talks about, or you can pull 2 .6 amp coils or 3 or 4 smaller amp coils sweet spot = highest rpm / lowest current draw point of a coil or coils, right before more resistance will make extra pulses. Bigger wire coil = higher rpm, more current,--- more smaller coils = higher rpm at less current draw for each coil because of the higher rpm, but more total current than just one coil and all this depends on your rotor number of magnets etc as far as what the sweet spot rpm and amperage is going be for a given coil size or number of coils running at that sweet spot rpm you want to charge as many bats as possible, from one rotor all the time, if you are not charging 4 bats from one bat even if you have to let the trickle charger make up the difference for a while, than you are not getting it. Pay for 1 charge, get your first charge back, and 3 charges for free, or pay for 2 and get 6 for free at a higher rpm.

If you got it running so that you are getting the first one back and 3 for free, every time you discharge 1 of the 5, then as John says you should be jumping up and down. OK as John says, one more time, how much current coming from the drive Bat, vs how much current is going to the charging bat, is not what we are looking for here, when tuned to the sweet spot, the charging current will ALWAYS be FAR LESS THAN the Current Driving the Coil...!!!!!!! SO, what is charging the batteries? The CURRENT LESS Radiant Voltage Spikes.. so forget about the in/out current ratio thing and LOOPING as that is not where the magic happens, it's really all about the batteries, and NOT about the motor.

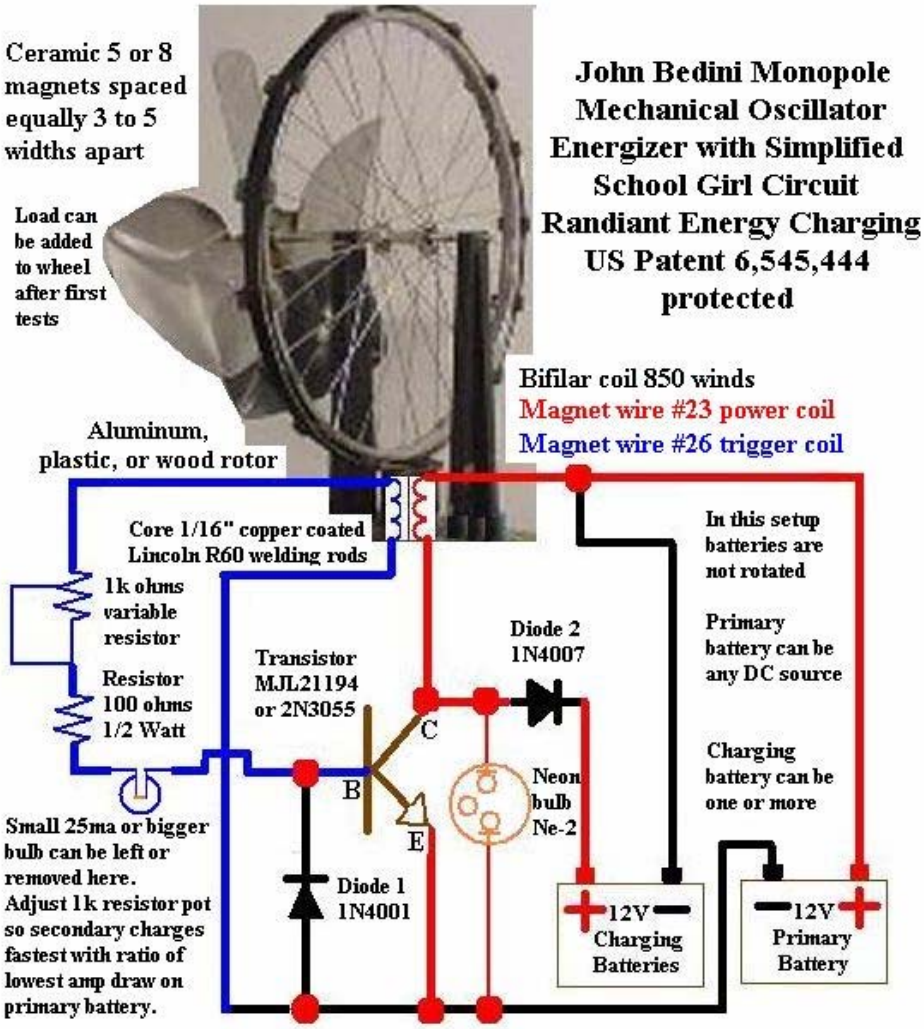

Image is from Peswiki and Rick's site

John Bedini said not to use neo magnets but 8grade fero magnets and than gradually add (go 2 or 3 per location) as needed .The magnets have to be identically spaced around the wheel. Unless this is the case, then monitoring with a scope while moving your coils around or will not accomplish much. The reason to have them all triggered together is so the voltage peaks will be additive. The whole phenomenon is about what happens in the vicinity of a very sharp "on". The sharper the better. Therefore, a tall peak is much better than lots of little peaks.

How does the neon work originally in John's circuit ? Is it always off, sometimes flash or just is always turned on?

The neon lamp requires something around 85 to 95 volts across it before the gas ionizes and begins to conduct and give off light. If you have a healthy 12 or 24 volt battery connected downstream of the output diode, the voltage across the neon never gets that high, and it has almost no effect on the circuit. However, if the battery is badly sulfated and has a very high resistance, or the battery is disconnected, then the coil pops the voltage up very high as the transistor tries to turn off but has not finished that. When the voltage reaches the ignition voltage for the neon, it lights up, diverting some of the coil current through itself, and lowering the peak voltage that would otherwise be produced.

Unfortunately, it is more of an indicator for this over voltage condition than protection during it, because it has a very limited ability to carry current. The NE-2, for instance is rated for less than a milliamp of continuous current, while the peak output current from the SSG can easily exceed a couple amps. Since the 2N3055 transistor is rated for 60 volts, collector to emitter, many will not last long with the 100 or more peak volts that happens while the neon is firing, valiantly trying to suck up that big current peak as its electrode atoms are sputtered all over the inside of the bulb by the intense bombardment of neon ions. If you see your neon blazing along, that means you need to shut down before you damage the transistor and neon bulb, and find out why the output current is not getting through your charging battery. **The neon bulb is an "Oh shit!" indicator**.

Solar SG

When using the SG to charge batteries with solar panels, you must match the impedance of the panel to the SG. To do this you need capacitors at least 20.000 uf 75 volts we run the SG all the time this way. Set the SG to pull over 1 amp of current by setting the base resistor. The next question, is it a multi-coil machine, if so set it to pull over 5 amps min. – John Bedini

Roamers Schematic

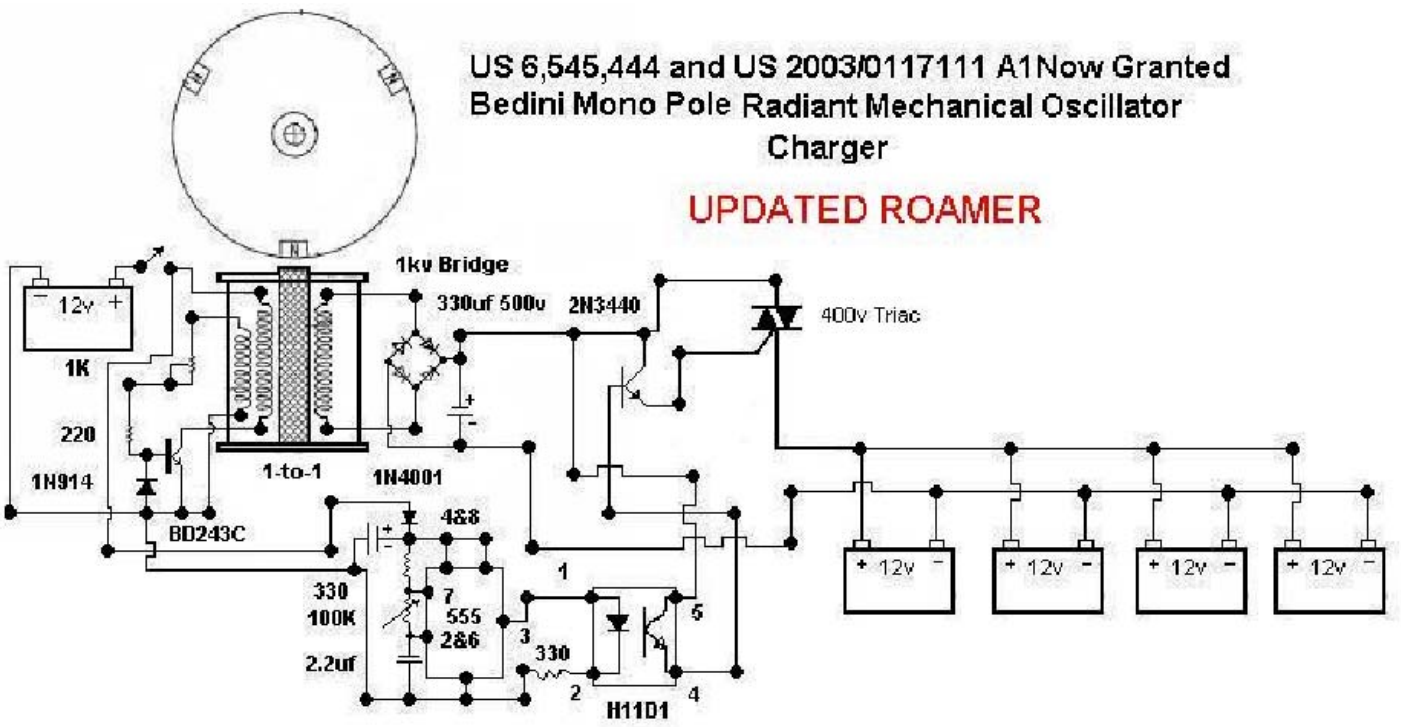

All Models Under Full Patent Protection

Sourced from John's site

4 battery Rotator system

This system is designed to run the fan or whatever tapped mechanical load continuously. As for a battery rotator, that is easy enough to do. Just get suitable relays that do not mess with the circuit and have them rotate over time or in relation to periodic voltage samplings. Ideally you would want three or four battery banks to give all batteries the needed rest periods for long life. We have to work with nature in **its** time as Bedini always says. We all need rest and so do batteries. After a battery is charged it should rest for while before being asked to discharge.

1)One battery being charged.

2)One battery power the front.

3)One battery powering a load.

4)One battery "resting" after being charged.

The battery powering the front will charge more than one battery. For long life and maximum energy output batteries need a rest after they are removed from a charger. With a "conditioned" battery (explanation below), it will gain more energy for a period of time after it is disconnected from the charger. (Technically, the lead ions are still moving in the "charge" state and become a negative resister). They need time to come to a rest and ready for discharge. This is what John means by nature takes her own time. Note one CAN call conditioning it de sulfating the plates.

SG circuit Slave

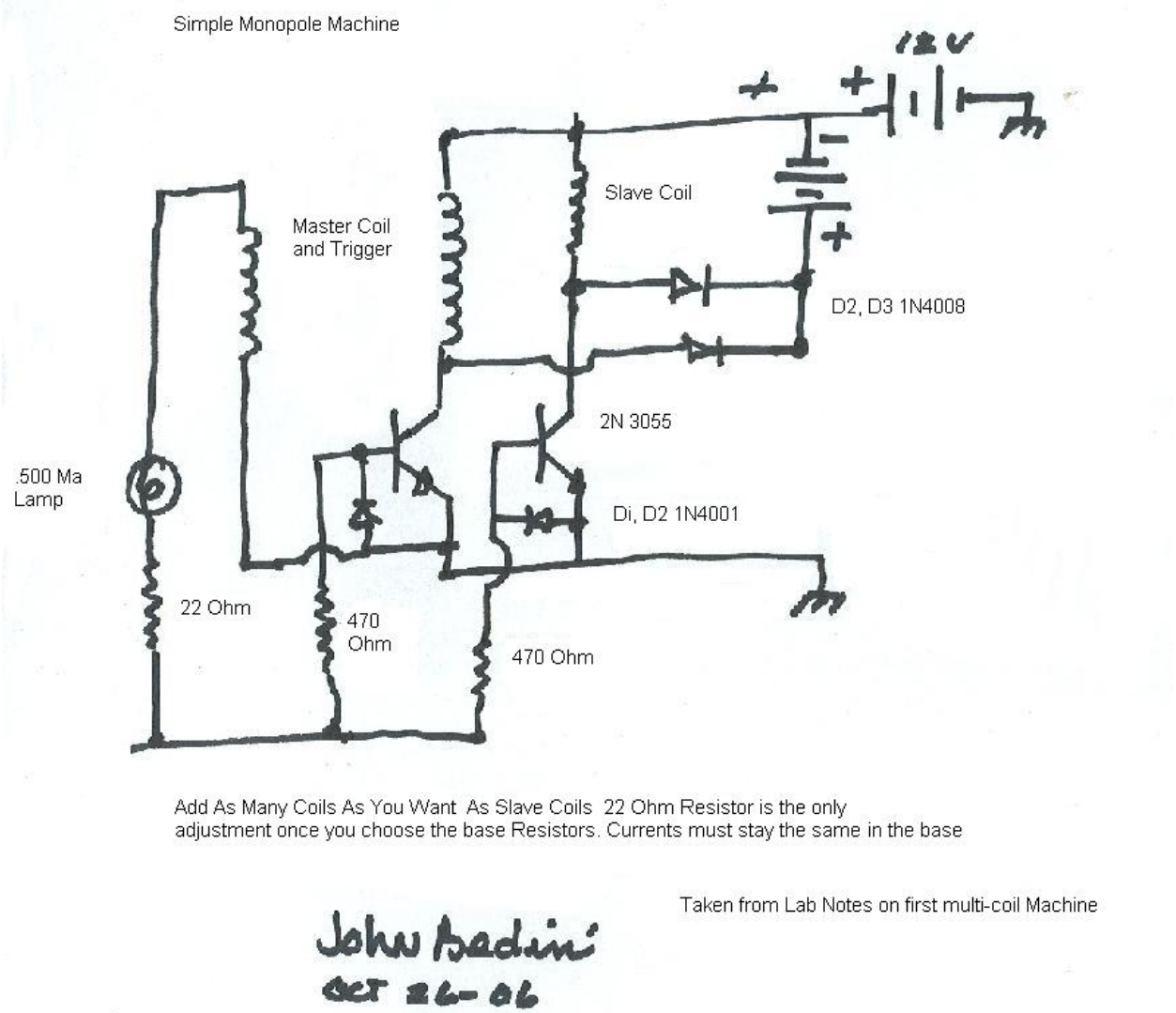

H-wave. Inductor in a Trigger Circuit

Solid state Cap discharge with SCR and 555 Timer – An inverted version of the Cap pulsar by RS

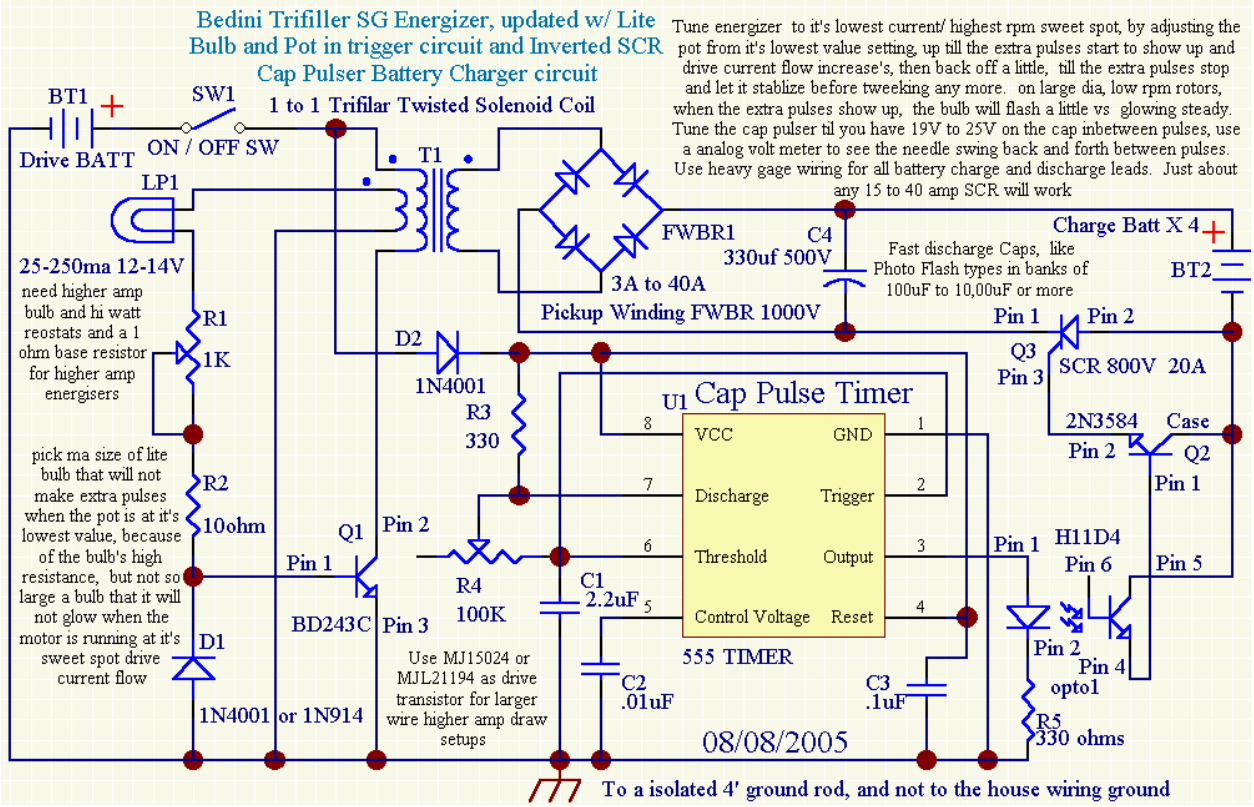

This cap discharge circuit is solid state with the SCR and 555 Timer, and is a inverted version Cap Pulser. When referring to trigger switching, than this will be described as a rotor version vs Mechanical Switching. The BEST results reported were with the bicycle wheel one, 2000 turn trifilar, charging 198,000 uf to 2-4 volts above the dead battery, you of course have to adjust the pulley diameter in order to have it trigger at that based on how long it takes to charge the caps.

Thread for technical discussion

Aaron's Quantum key description of the cap pulsar

Aaron's "the Quantum key" book is a GOOD summary of Tom Bearden's EFTV book. On page 107, last paragraph

"*I do not pulse the positive terminal of the capacitor to the dead battery's positive terminal. Instead, I leave the positive terminal connected and pulse the negative side of the capacitor to the negative terminal of the battery. It is not within the scope of this book to explain how this is different but it takes advantage of negative energy that is time reversed, and negentropic or self-ordering.*"

There is in existence a john Bedini's inverted circuit with the 555 timer and the SCR on the negative terminal. But his description is perfect to connect the idea with the time reverse characteristic of negative terminal of the battery.

SSG with lighting Variant by "the Dude"

Quote-I've recently been directed to an excellent discussion on the Energetic Forum that was started by Imhotep. Here I've hooked up the coil from Imhotep's Radiant Oscillator to the power coil connection one of the Bedini circuits. I have to give the wheel a turn to get it oscillating and then stop it to get the transistor to self oscillates. I'm getting a decent illumination on 2 helicoil

16/20/24watt bulbs and a 15w fluorescent wired in series. When I disconnect a lead in the series of bulbs one or more bulbs continues to light! I'm not sure but is that a example of a radiant current flow?

I just started with this arrangement and it seems to be giving my secondary battery a better charge than the wheel did on its own. Who knew? Maybe Tesla would have something to say.

In case some of you want to try to get your Bedini circuit self oscillating and then hook it up to a ignition coil, this would be one way that works for me. I have to reiterate the fact that my oscillating setup seems to far surpass the radiant charging that the original design could produce. I hope John Bedini doesn't mind my borrowing his schematic. –The dude End quote.

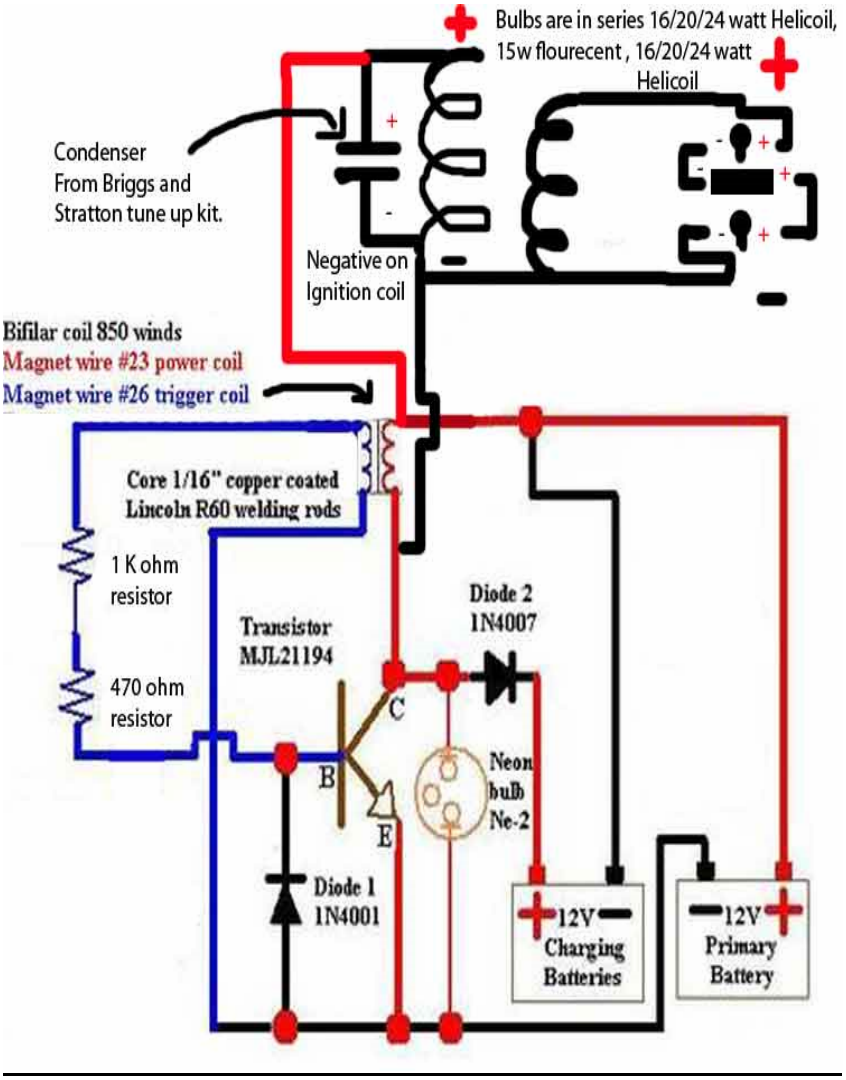

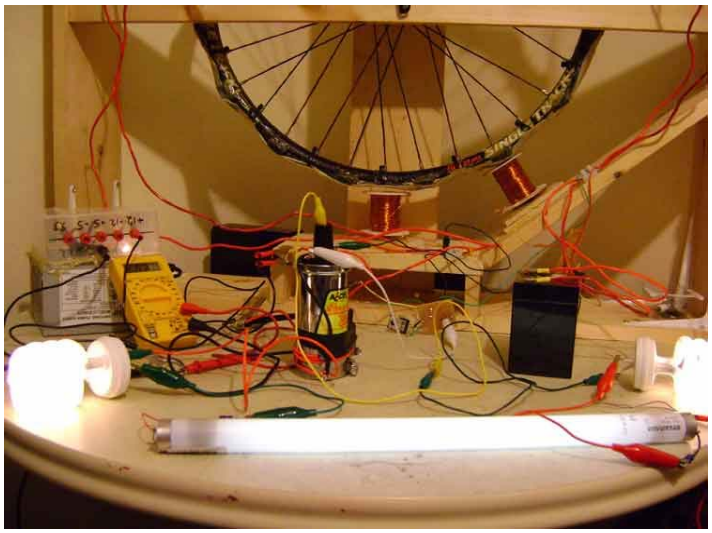

Tesla's High Voltage impulse lighting methods – Imhotep's radiant oscillator (PDF)

The dude-My Bedini wheel with radiant oscillation – Project Website

In conclusion

We know the waveform we want from the rotor based energizer. We know the frequency we want, above 10k. can be tricked using a node in the wire we know the impedance matching we want from the charge battery (low) we understand at least partly what is happening in battery chemistry with the red lead. Overcharging will destroy it. We understand charging according to nature's time not ours. We trigger the battery into self charging with a time charge we want low electron flow to the charge battery this is just a few of the clues that can be compiled.

SSG links

How to videos by introvertebrate

Earth Battery and Earth Rod SG By Aaron

From the beginning, John has shown that you can ground the sg to the earth. Look carefully at the following:

Hook up of SIMPLE MOTOR

© John Bedini

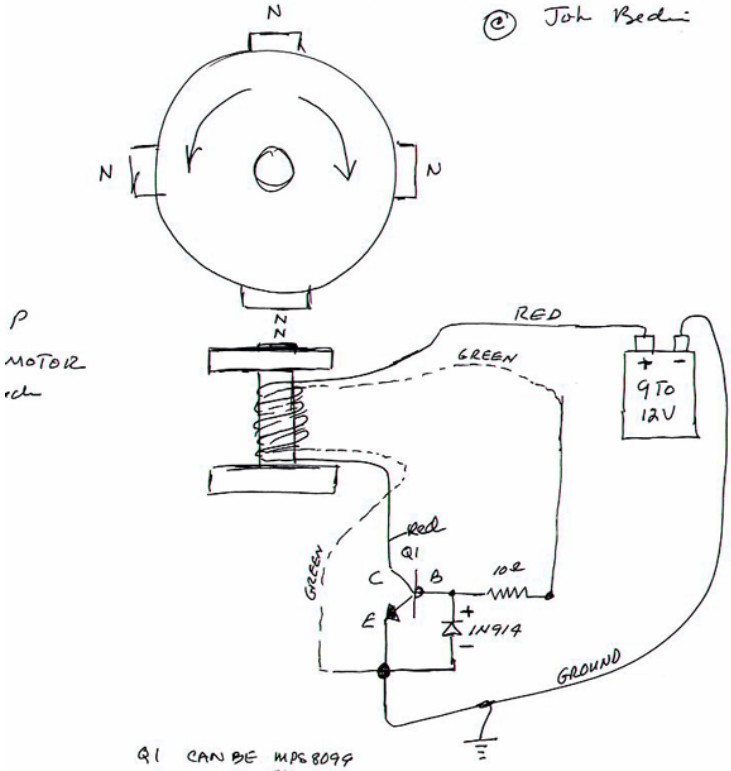

P

MOTOR

Q1 CAN BE MPS8099
2N 3055

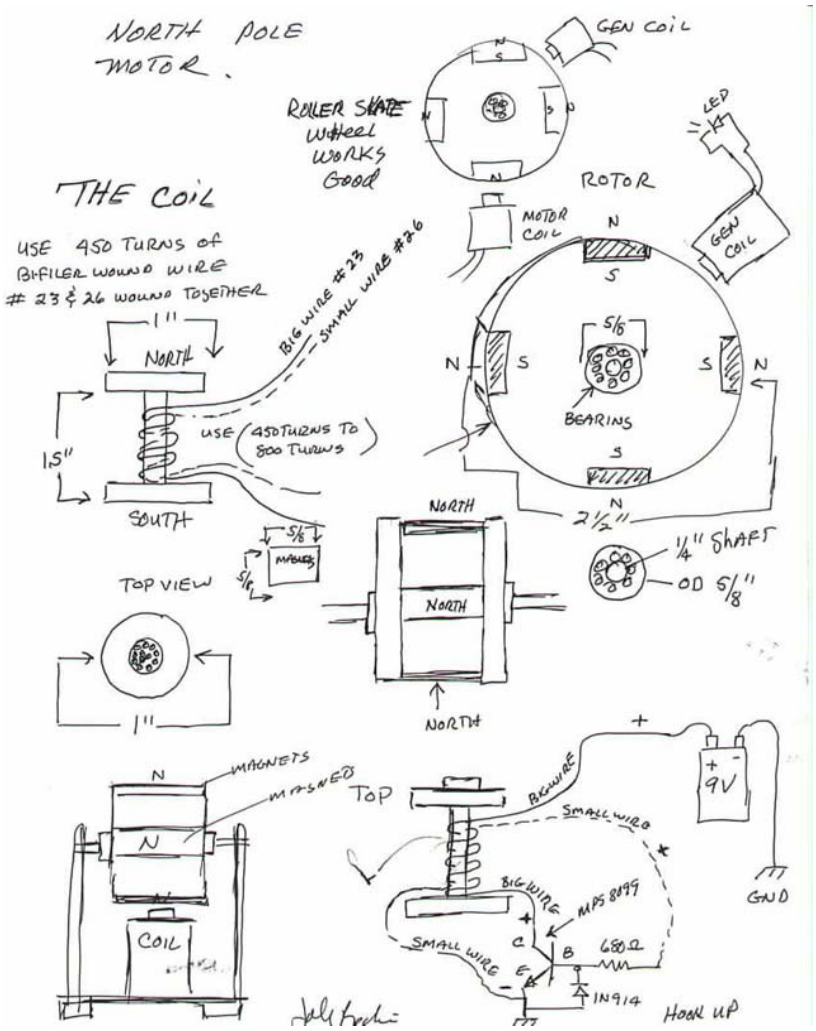

The following picture is what Below pic is what I'm pointing out:

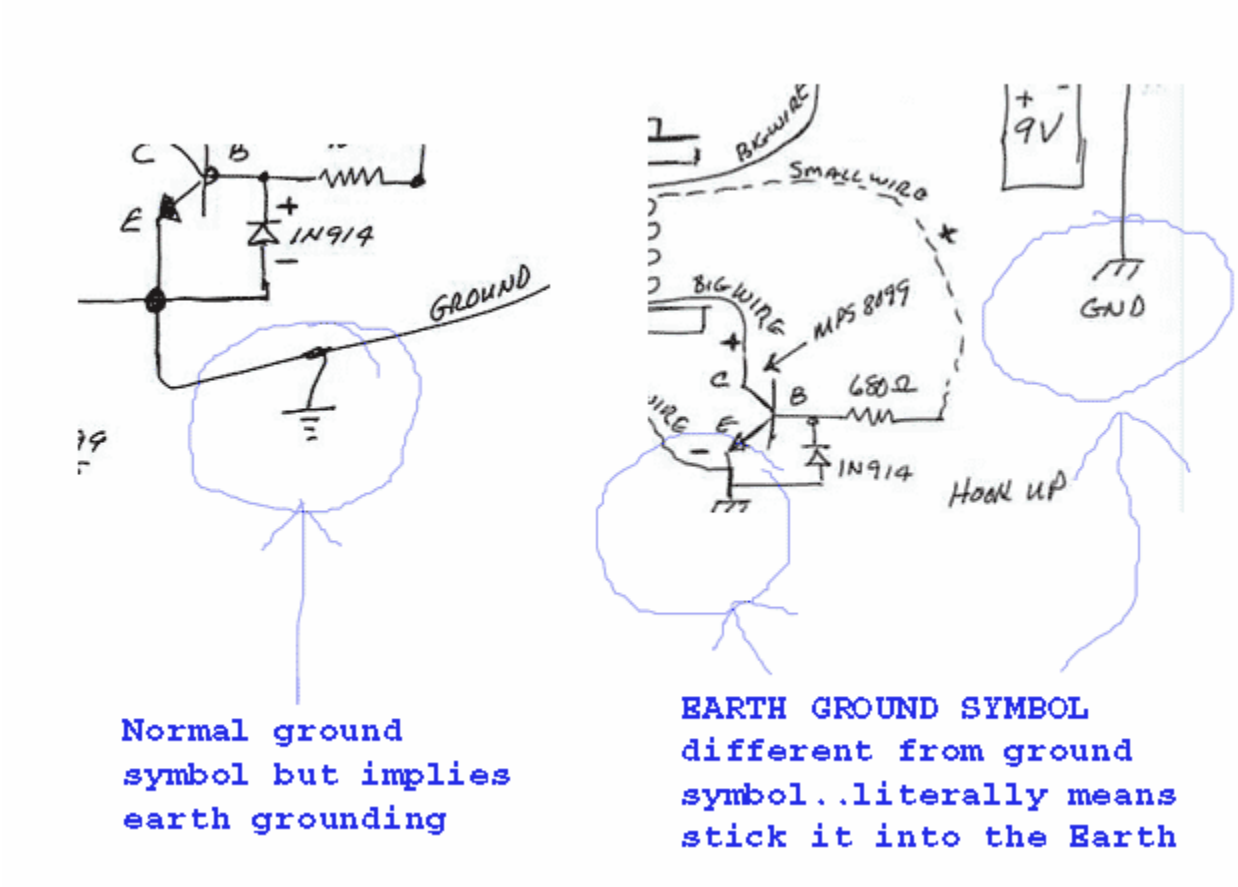

Unfortunately, most people haven't paid much attention to these details. In Aarons diagram:

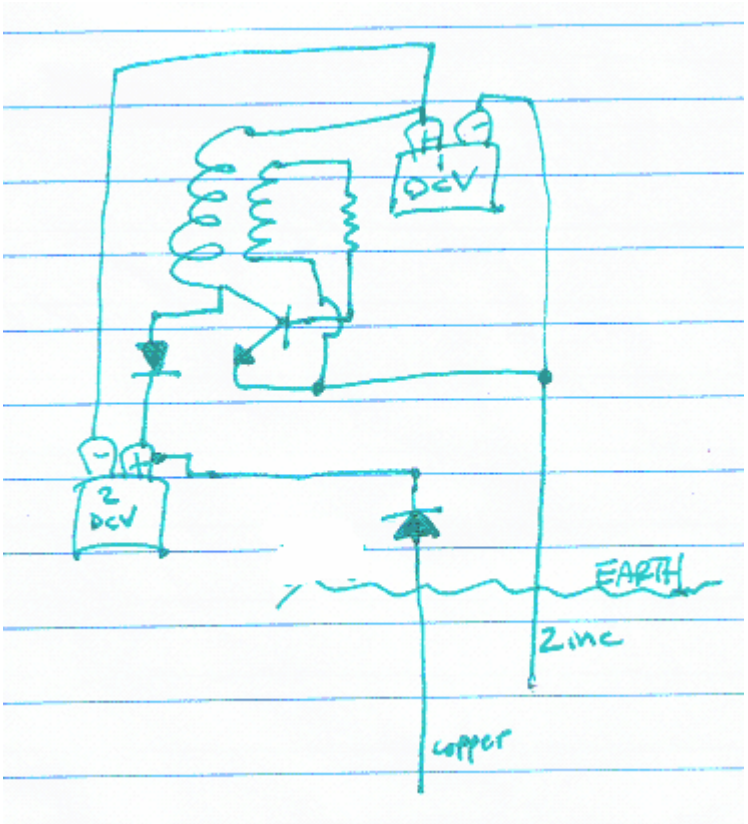

I show something else. The zinc rod from the SG's ground is going to earth. That is a real GROUND. The Earth may or may not be used as an electron source. You can get a POSITIVE radiant potential

(voltage potential) from the Earth and this has nothing to do with electrons.

My diagram shows Bedini's ground as she has shown in front of everyone for years but hardly anyone noticed but a few. The other copper rod is what Kevin had on his setup in addition to the goofy magnet setup when getting way over 1.0 COP. Thing is, Kevin didn't even have the regular ground rod from the neg on the system...just the rod with diode to the + on the charge battery to absorb radiant potential from the earth.

This diagram is putting BOTH of them together. It will be obvious to anyone that has experimented with Earth Battery setups that looking at my diagram, both rods together obviously form a basic earth battery or a real potential difference at both rods...about 2-4 volts can be easily expected almost anywhere at minimum. You have to poke around a bit to get above 2 volts but you can find it. The battery, better if large plates or of other construction like Bedini shows on his site, intercepts and soaks up earth currents and entrains the earth currents there.

What can be expected out of doing this? Everyone has to do their own experiments but what Kevin and I have found is that the charging effect in the output battery increases. You can see where the diode leaves the copper rod and goes to the + on the charging batt...there are other places you can put it but you have to explore that on your own.

Just see the SG for what it is...it is a gas valve and all concepts of gas pressures apply. What do coils do and how are they pumping this gas and how do you get low and high pressures and putting that together with what is sitting on that diode on the copper rod, well some things should reveal themselves. In Aaron's replications the Cap is charging by pulling the negative and not pushing into the positive.Works better the deeper you go with the metals. Works better with more mass. It is easy to get about 2v if you look around. I've gotten up to 4v with 2 rods but seem hard to find that.

The main purpose of Aarons replication is just to show that there can be real practical effects to be had from an Earth rod. He just hope others use their own creativity and innovation to see what they come up with. There are different ways to utilize the pos potential rod and neg potential rod.

If a neg rod is connected to a capacitor's negative for example..Even with one wire...if the "Earth battery" has a potential difference at its terminals great than the capacitor's terminals, the negative line will form a suction on the negative terminal on the cap and will create a bigger net positive pressure in the cap. You are forcing the negative on the cap to become a lower negative (by suction of the lower negative potential) than it was before and that creates a larger potential difference between the negative and positive terminals. You did that not by even doing anything with the positive but only by manipulating the negative or lower potential side of the system.

If the earth neg is a lower potential than the neg it is connected to on the circuit, it will then act as a sink to give a more "conductive" path for gravity to channel more potential through the system. The Earth Battery will actually grow stronger and stronger over time. The rods I show is not really an Earth Battery but does demo the potentials are there.
One of the tricks on an Earth Battery is to keep all the terminals from shorting each other out.

Earth Rods by Aaron

One thing to realize about Earth Rod applications from my experience is that the results are NOT consistent. This doesn't mean that you can't always have positive benefit; it just means the results change over time. ALSO, depending on other variables, the results can GROW over time. I have shared this concept with a few Bedini experimenters and have received such a wide range of reports. I'm sure the geography has a lot to do with it...where are the Earth's acupuncture meridians in relation to the rods, etc.I used to have Earth Rod systems going to grids laying under a bed mattress for healing purposes at a house about 7-8 years ago. John Bedini turned me onto the Earth Rod concepts back then.

A good way to find a good spot to put a rod is to get a multimeter and put it on DC volts. I had some long wires and alligator clips attached to the ends of the probes and the other end I had 3 foot rods...one steel and one copper. I would put one rod in the ground...doesnt' matter what rod you use for what charge because you're just looking for the largest potential difference you can get. One rod in ground...deep, then take the other rod and walk around with it sticking it in different spots. Wherever you get the highest reading, leave the second rod there.

Then mark where the first rod is, take it out and see if you can find a higher reading with it somewhere else, if not, put it back. If you get a higher reading, you can take the other rod and move it around and go back and forth. You're lucky if you can get 2 volts. I found 4 one time in my Qigong Master friend Rodger's backyard. Anyway, this will show you some good spots either plus or negative. For the TRV discovered rod method, it takes one rod...not for grounding purposes but to draw the Aether from the ground. EARTH ---→ ROD ---→ DIODE ---→ POSITIVE ON CHARGING BATTERY

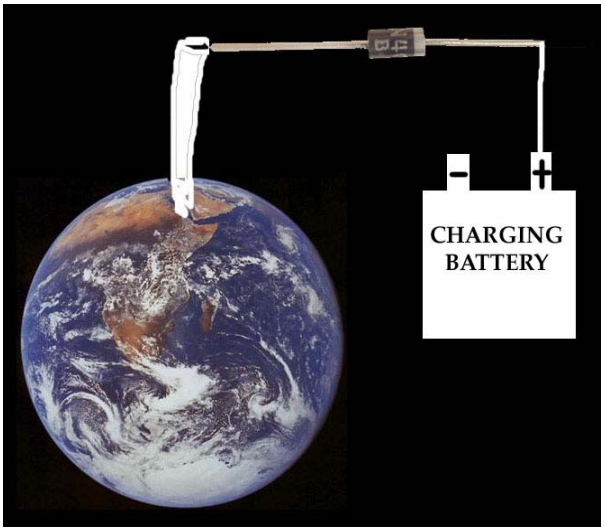

That's it! The TRV session was for logical next step enhancements to the overall SG circuits and with research combined with the data, the above is what it revealed. The line on the diode should be on the side of the battery so the positive voltage potential moves from Earth TOWARDS the charging battery positive terminal.

This is so easy for ANYONE to do that I would recommend that everyone at least play with it and try other variations if you want but the above is the exact method that was used on Kevin's SSG with the alternative superpole magnet configuration. Also, try potash around your earth rod ground, like Kevin does, with the ground rod going through a diode to the positive terminal.

Earth battery and Earth Rod SSG links

Technical discussion –Energetic Forum

Experiment: Ground Antennas By Gerry Vassilatos & Michael Theroux

John's coverage on Earth Batteries

PowerPedia:Earth battery

Directory:Earth Batteries

Earth-battery-sg-2- energetic forum thread

SSG Links

Starters SG guide BY RICK F, RICHARD L., and RS

John Bedini Monopole Mechanical Oscillator Simplified School Girl (SSG) Presentation- By Rick

PesWiki coverage

Rick's Self Runner

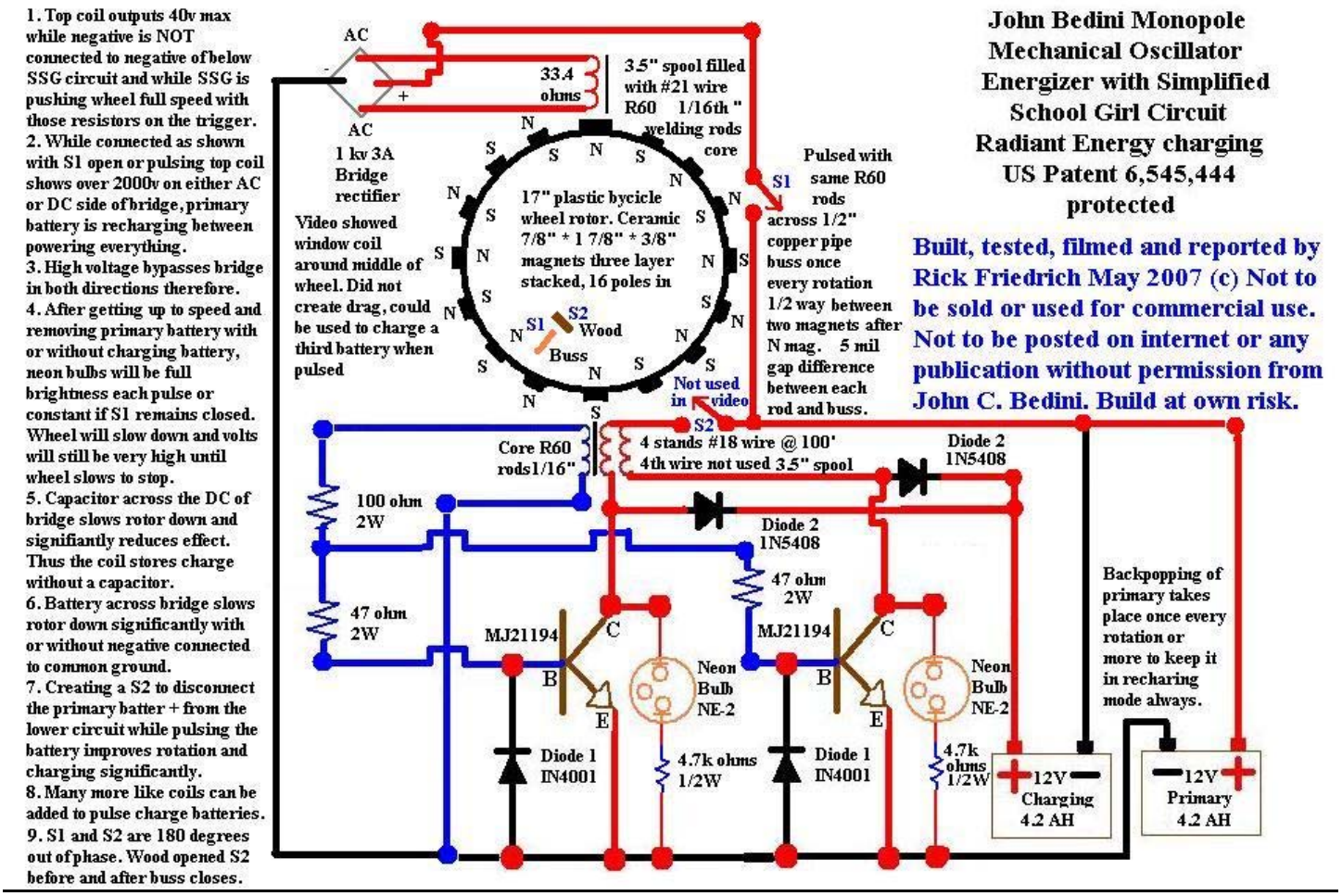

Source

Complete reports and background can be found on the PesWiki page listed below

Koneheadx Self runner recovery

Try a FWBR AC legs across your motor switching, and just one AC leg of FWBR gets switched ON-OFF in echo-pulse to initial motor pulse (DC side of FWBR into load)Try it – it has nothing to do with any stupid laws (scientific slogans really) just makes your motor run faster, more powerful, with less draw.Forget about batteries if you are sick of them – re route backemf/recoil into 2nd set of coils like Ian Coke-Richards "butterfly" circuit see on his site: http://www.mintakafulcrum.net/

"Condition" the backemf/recoil that makes the "volts climb" in batteries...do this by putting it into DC CAPACITOR FIRST...then pulse-out cap into battery at near-twice the voltage of battery being charged (23V in cap if 12V battery) Batteries don't really like or accept the quick pulsing rate that runs motor coils – they like to "slosh" so go much slower rate with battery-charge pulses.

Self Runner links

http://peswiki.com/index.php/Directory:Bedini_SG:Self-Runner

Energetic forum discussion and ideas

Translated site with a tutorial of the self runner

SSG Circuit modified to include Tesla's Impulse technology

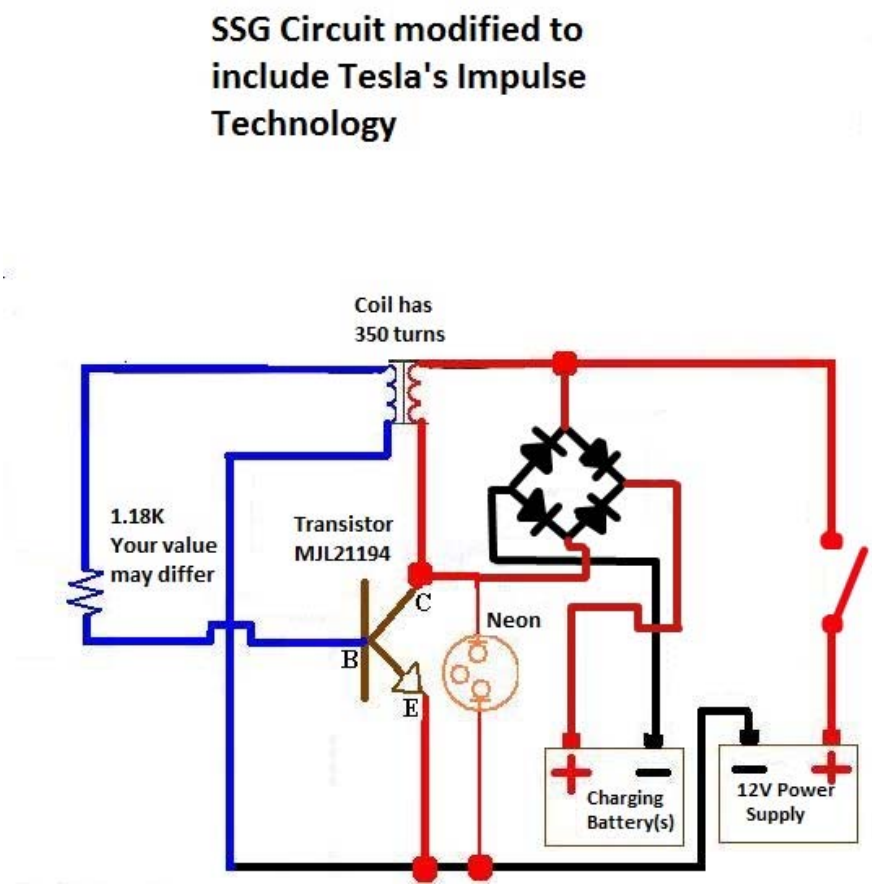

Multi Coil system

Introduction by John Bedini-Rather then get into a big discussion over what material is better for the rotor at this point, I want to point out a few things. As I said in the beginning this is a simple machine to just prove that you can have a machine that supplies mechanical energy to do something with no matter how small that is. It's the first machine that runs does the work and charges a battery, it recovers all the waste energy in the circuit and supplies it to a secondary battery, don't you wish you had a toy like that, because it is toy sized, but toys make "big machines".

You can alter it to charge capacitors if you wish. You can screw it all up with any circuits you try and improve it with, hopefully it will work the way you want it too, just like a textbook motor, no recovery. If your circuit is working correctly no transistors get hot and coils do not melt.

A multi coil machine must be balanced, that means all the currents in every device. Base resistors, transistor bata, coils, why the twisted coils, to keep the capacitance and inductance the same. If the transistors are not the same heat on all, something is very wrong in the way the base circuit is working, also this could mean a bad transistor in the bunch. Fet's, do not work well here, wrong capacitance to hard to drive without a driver circuit. Opto circuits work fine, hall works fine but it is a waste of current when trying to get COP>1.

Why such low current on the input, so you get more radiant voltage potential. Voltage first, current last = time in switching, long switch time more current no COP>1. Current builds up no radiant voltage. I also said the high voltage is part of the surrounding 3D 38eservo field, you do not half to agree with me on this as you must see it the way the text states it di/dt, rate of change in the coil. What you forget is Q1+Q2+Q3+Q4+Q5+Q6> is additive and subtractive with the magnetic fields during the rate of change while the rotor is rotating in the 38eservo field.

Instead what I get is complaints for trying and suitable insults with those that just do not understand what this means as an application. I made the machine so anybody could build it with junk, very little cost to prove a point. Yes it is possible to get COP>1 with it. I found the welding rod to work the best overall which you could get very easy anywhere, point 1.

I used ferrite # 8 magnets you could get anywhere. Point 2.I used a normal solder roll for the core. Point 3.I just took normal wire to make the windings nothing special. Point 4. I used anything to make the Rotor as it did not make any difference as I was just looking for a "trigger signal", point 5 you could figure an exact coil and it would not be any better. It's the trigger that is important. It's not a "Riddle" when you understand the machine.

All the other coils are slaves. You may add as many windings as you need on each coil, the main coil has one extra winding, the trigger winding. All the transistor bases are summed together to a common buss with their base resistor's, all the output diodes are summed together on a common buss connected together also.

All the rotor magnets must be in perfect alignment to the pole piece's all magnets must be measured for gauss to be equal within 5% min. I would also measure transistors for Bata as this will effect the machine. All the gaps must be the same. I do mine with a gap gauge from pole to pole 5 to 10 thousands will work fine, it's the only way you get a good wave shape. Remember what the H wave shape looks like, the same as the solid state nothing can be different.

A six coil machine should be around 5 amps input current @ 12v. alltransistors are mounted on a small flat heat sink. The base trigger coil circuit must then have a series resistor in series with all the summed transistor base circuits. It is much easier to build a 11 strand coil on the simple SG machine with 23 wire all twisted together at 100 feet on a 5 inch bobbin ¾ inch hole. This is not a easy machine to build and not shown on the diagram-JB

A youtube video of a 9 wire just as John describes scalar north rotor, with waveforms.

There are lots of tricks for setting up and tuning a multicoil. You only need one trigger winding and one globe etc if all coils are to fire at once. You need to get it firing on one coil, one winding first. Once you know you have that coil and power winding firing you can move onto multiple transistors. All bases must have the same resistance but that resistance can't be too high otherwise it just won't fire. Get one running and tune it and you will have a fair idea of what base resistance to use. Reversing the trigger coil could fix your problem, if its polarity is around the wrong way it won't work.

Now, one thing that John has mentioned is to try wrapping all 25 strands of a 6-coiler onto one single larger coil form instead of using 6 separate coils.

Lee's diagrams

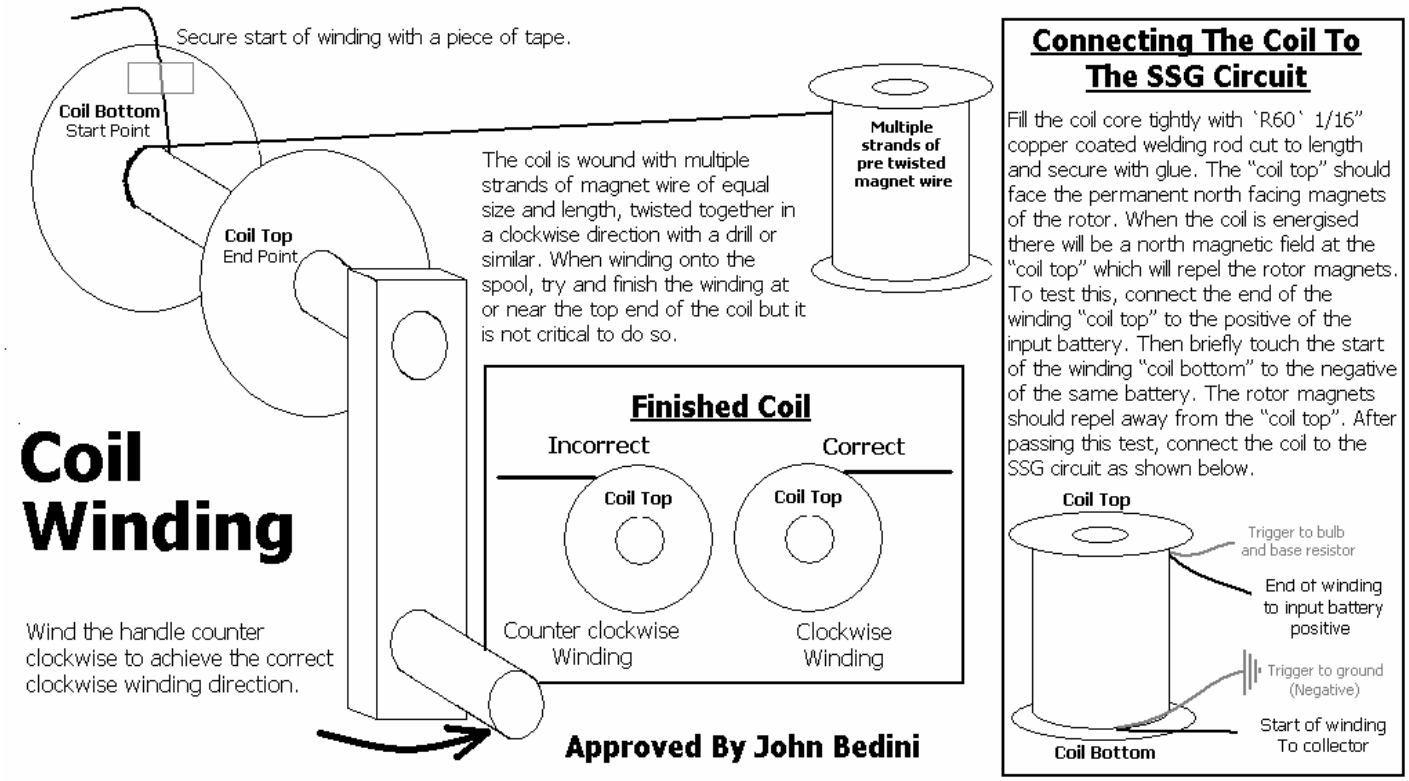

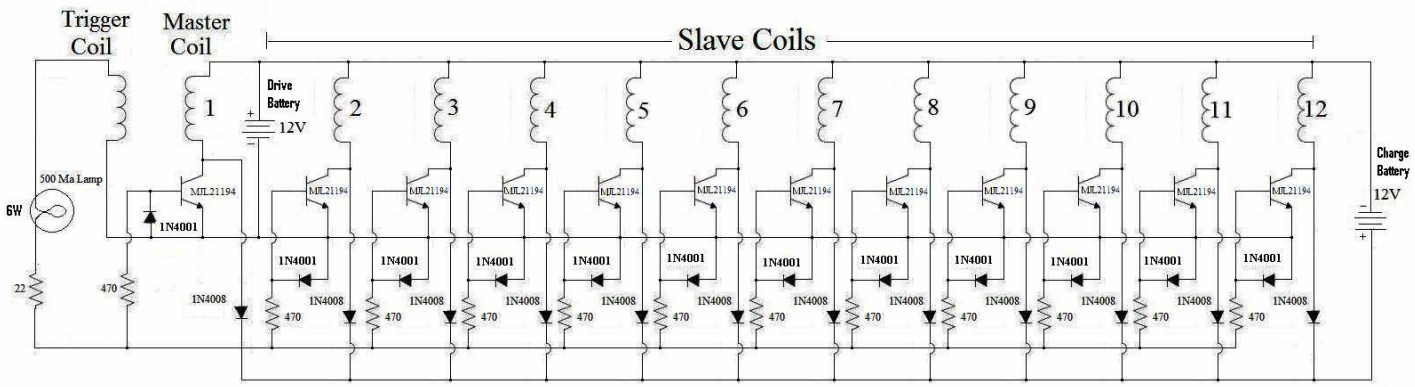

Add as many coils as you want as Slave Coils. 22 Ohm Resistor is the only adjustment once you choose the Base Resistors. Currents must stay the same in the base. Taken from John Bedini's Lab Notes First Multi-Coil Machine. John Bedini Oct 26-2006

Per John Bedini's post 10/27/06 8:01PM 2N3055 might not be fast enough for this device, I think you are going to need a 4Mhz device something like MJL device flat pack so you can mount it.

Slave Coils Jpeg

John's Multi coils walk through

Dan Breeden's Handy SG/Multi coil Builder's Guide

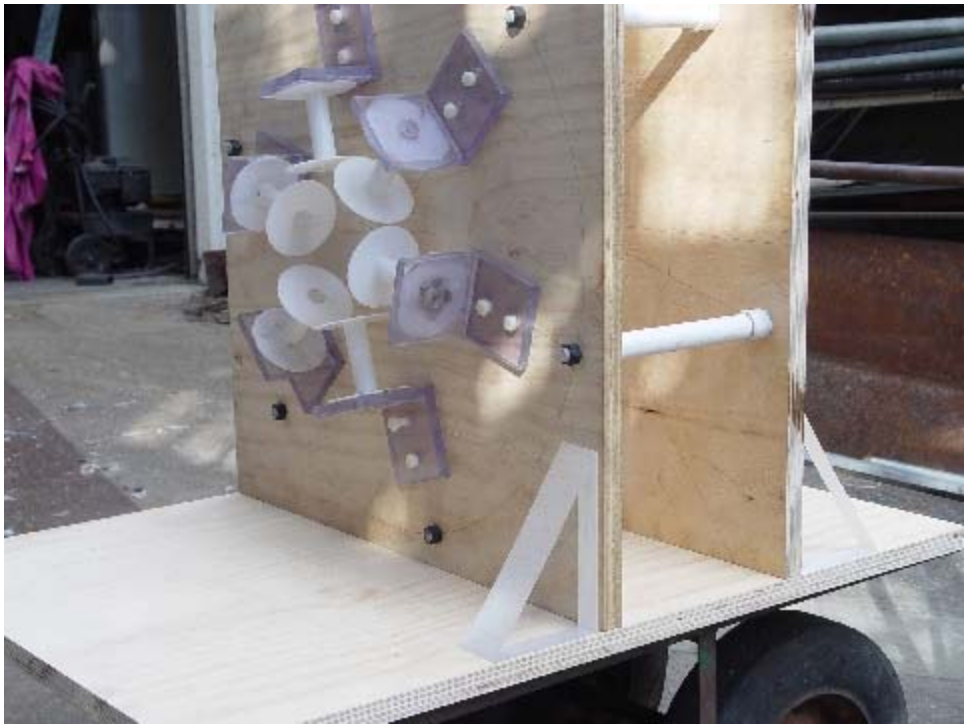

Dan's version of SG under construction

INTRODUCTION: This build instructional guide is an attempt to encourage more people to replicate the 6 magnet energizer as built by John Bedini. Some people are good at electronics and poor at mechanical stuff. Others have no idea where to get weird parts where they live. I've tried to design this version with readily available parts. The main thing is that nobody wastes a penny on components that are unsuitable.

This idea started in mid 2006 when I suggested to the SG list that we change to a second version and try to standardize as many components as possible. I proposed that this V2 be based on John's 6 coil machine. I machined rotors and sold them at cost. I could see from correspondence that some people were building constructs that weren't a good design. This "book" is a collaborative effort to show one way to build a Bedini energizer. There are many ways to build.

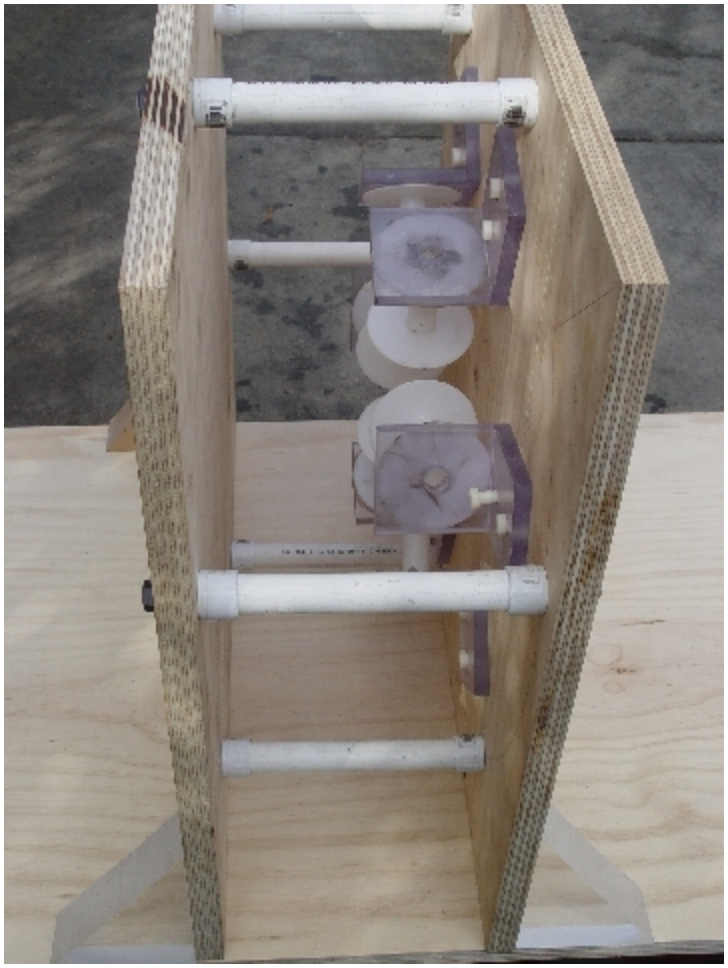

Use of non-ferrous construction materials

RULE 1: "Everything interferes with the radiant energy so I built with Plexiglass" – John Bedini.

If that's John's rule, then it's the rule here too.The materials are Wood, Plexiglass, Fiberglass, Plastic, Phenolic and other non-conductive materials. Search on "eddy brake" to see why the frame isn't made with copper or aluminum.

The bearings are the only stationary parts that are conductive. The coil, core, conductors and semi-conductors are necessary exceptions. The coil is where the radiant energy is "transduced/attracted". When the energizer is humming along nicely, it will affect iron or a gauss meter up to 5 feet away. Small fasteners may seem innocuous, but they have a negative effect. Anything that is conductive will distort the field of the coil. JB glues his components together.

This design isn't as elegant as John's but it's meant to be a workhorse rather than a showpiece. You're free to change anything that you want, but remember rule #1.In general, all machinery is jig-bored for alignment of the bearings. This design uses self-aligning bearings to avoid that necessity. JB uses a stainless steel axle. I use aluminum because stainless steel averages 26% iron. You can test it for yourself but, different axle materials cause different results.

GETTING STARTED: The *main platform* starts with 2 pieces of material 24 X 24 X 1 inch. For a 2 rotor machine, 28 X 28 X 1 inch is necessary.

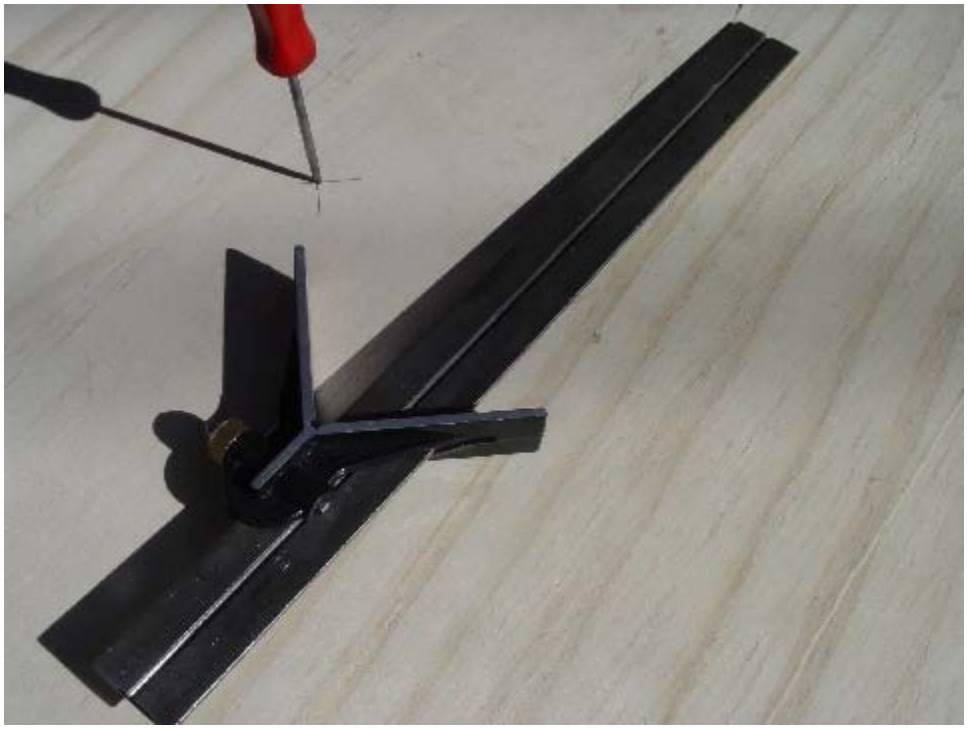

Center finder is a great help

This little gem will find the centers of both circles and squares. It's a center finder. It's especially useful when the corners are beat up. Use it to draw your diagonals. The center hole is your first reference, the diagonals are your second."A center-finder is a great help. I laid my new center-finder on a corner. I drew a line and flipped it over to draw another line – same corner. There was an 1/8 inch difference. Check it before you believe it?" – Dan Breeden

Ice pick as center punch

Use an ice pick to punch a small indentation at the center point which will act as an anchorfor the compass.

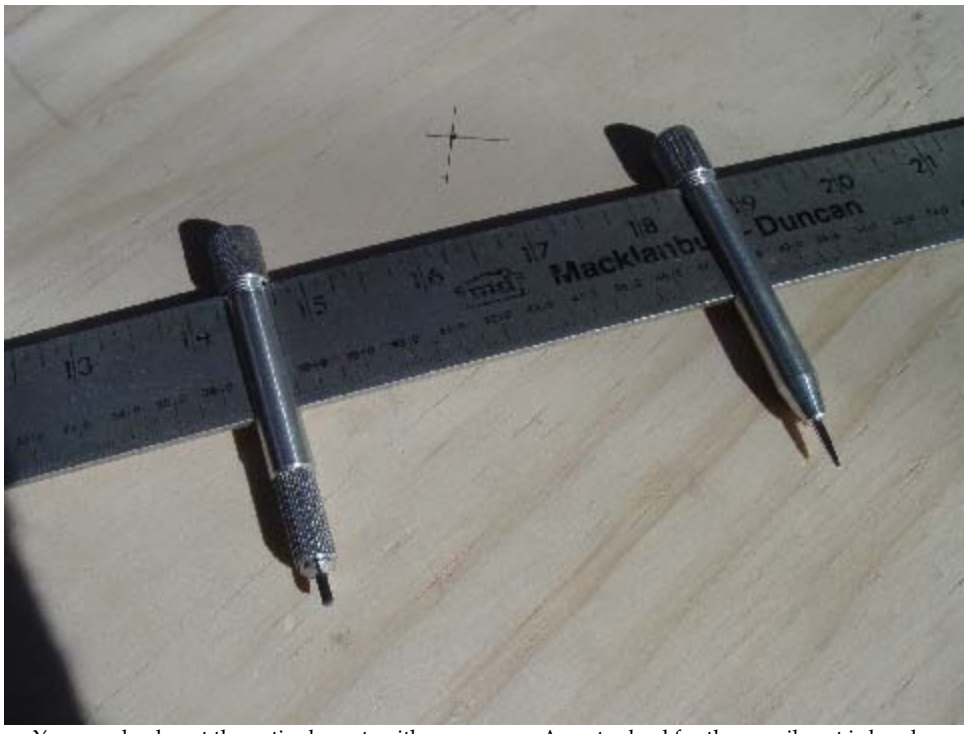

You can do almost the entire layout with a compass. An extra lead for the pencil part is handy.

This handy device is for drawing circles. It's available from drafting/art supply stores. They're called compass points and they slip onto a yardstick. Some newer yardsticks are too narrow so beware and check the fit before you make your purchase.

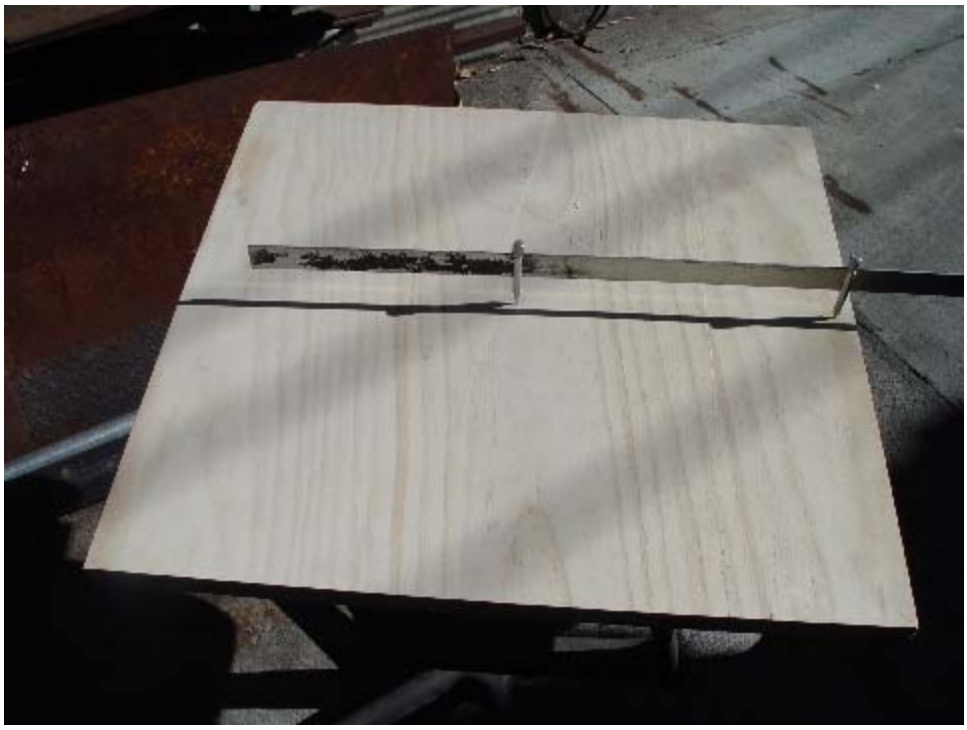

To begin, put the point of the compass in the center hole and the pencil point out near the edge. Leave enough room so that the spacers aren't right at the edge. Scribe a nice clean circle.

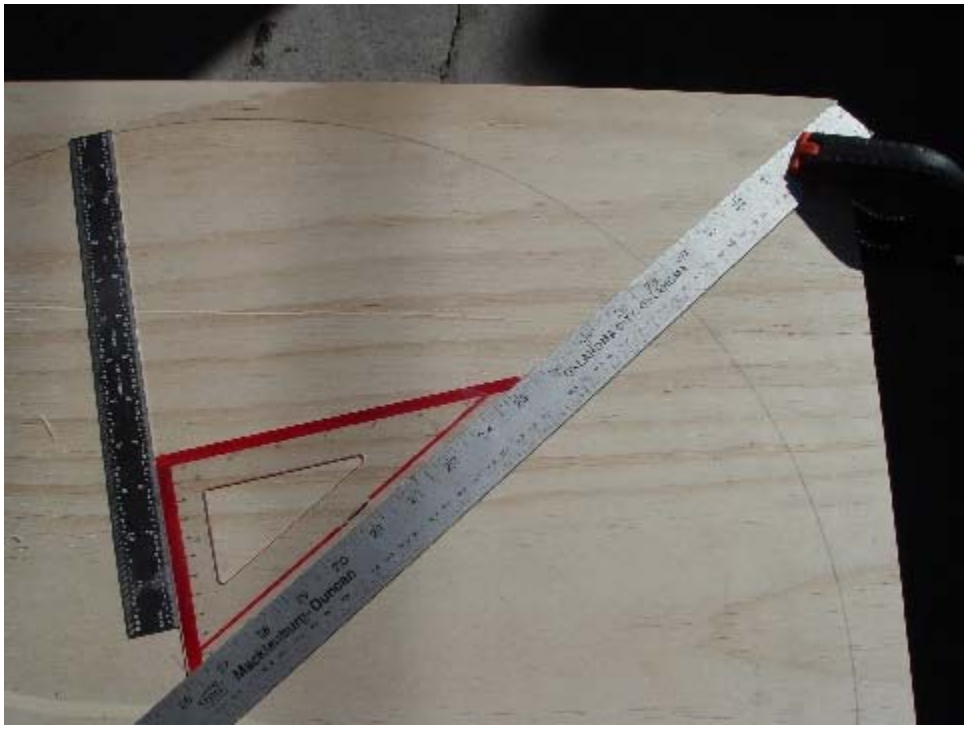

Preparing to layout 60 degree marks

Lay a scale [ruler] on the diagonal. It's easier if you clamp it. Take a 30-60-90 draftsman's triangle and lay it on the diagonal with the corner at the center hole. The side of the triangle will be at 60 degrees to the diagonal.

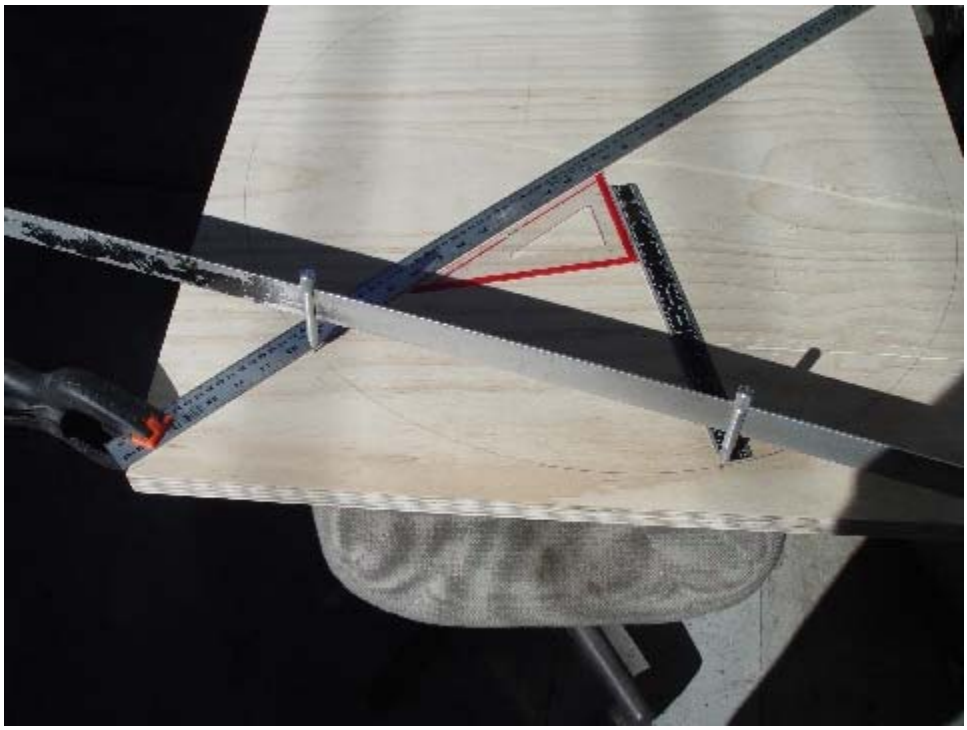

Use of compass to mark 60 degree points around rotor position

You can use a second scale as an extension to reach out to the circle. If the point of the triangle is at the center hole, the 2 scales touch the circle at exactly 60 deg. Put a small mark with an ice-pick. Put 1 side of the compass at the point where the first line touches the circle. Put the pencil point of the compass at the second line where the circle touches the straight line. Tighten the adjustments and then go around the circle marking this length section by section. You should end up back at the start with 6 evenly divided sections. If you mark off 3 sections to the left and then 3 to the right, You'll have half the error. When you're happy that the 6 sections are even, scribe 6 lines out from the center point. These are your third reference points. At these 6 points, drill a 1/8 diameter hole, ¼ inch deep.

Eye ball center location for rotor position. There is adjustment room built in.

Lay out the rotor and coil mount. JB has the coil mounts under the coil for compactness. I put the coil mounts outward to make them more accessible. Put the spool right against the rotor. Mark the 2 slots in the coil mount onto the wood.. You can build with the coils in line with the spacers or between them. You will have 2 elongated circles. Put a mark 3/16 inside from both the inboard and outboard edge of the elongated circle on center.

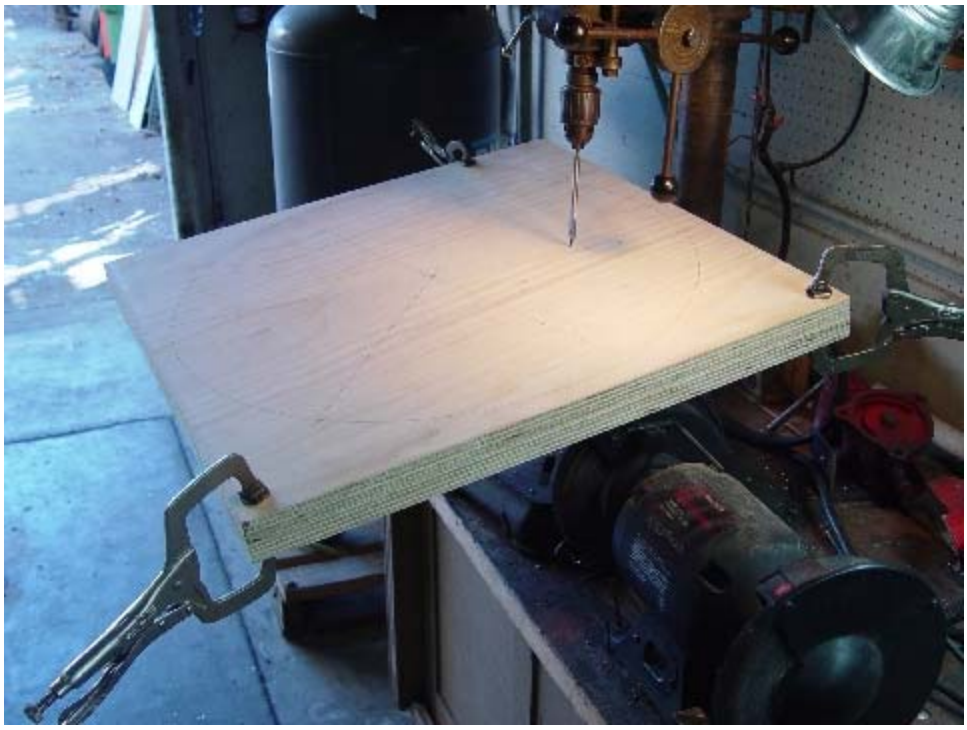

Hopefully, you started out with 2 perfectly matched pieces of material. Phenolic is the best followed by Plexiglass [48eservo], next is hardwood; Maple or oak. Last is plywood.Clamp them together perfectly even. At the very minimum, 1 edge has to be perfectly matched. Drill the 6 pairs of holes using a spade bit. Drill to finish size. Drill to ½" for fiberglass rod or 7/8" for plastic pipe.

Next is the center hole. Use a hardwood or plexi block as a guide. Use a drill press to drill a 1/16 hole in a block. Then use a pistol drill to put the bit through the block. Align the exposed tip of the drill bit in your center mark. Push down on the block and then drill the hole through both pieces of material. You only want a hole big enough for the point of the compass.

Completed hole layout

Use the compass to make equal marks in each of the 6 sections. You need to drill these 12 marks with a 5/16 spade bit all the way through. Only drill 1 piece of material. These will be threaded 3/8" coarse.

Coil brackets mounting holes being cut and threaded

A tap readily cuts the receiving threads for the coil mounting brackets. Thus they can be mounted and bolted directly to the platform frame.

Coil mounting bracket components pieces being cut on a Radial Arm Saw

Hopefully, when you laid out all the holes, you remembered to allow for the width of the blade cut. Clamp a stop in your saw and cut out the bases. These pieces are 3 ½ X 4 long. The other half of the coil mount is 3 ½" X 3 ½". Use the center finder to mark the center of the other pieces and drill them to ¾ with a spade bit. This is of course, the size of the core.

Using scrap plexi as a stop to hold bracket material

Rip plexi in to 3 ½ strips in a table saw. If it doesn't have paper, use tape. Mark holes on center 3/8 inch apart. It helps to center punch the marks. Use a 3/8 spade bit for the holes. Clamp guides in the drill press to speed it up and insure repeats.

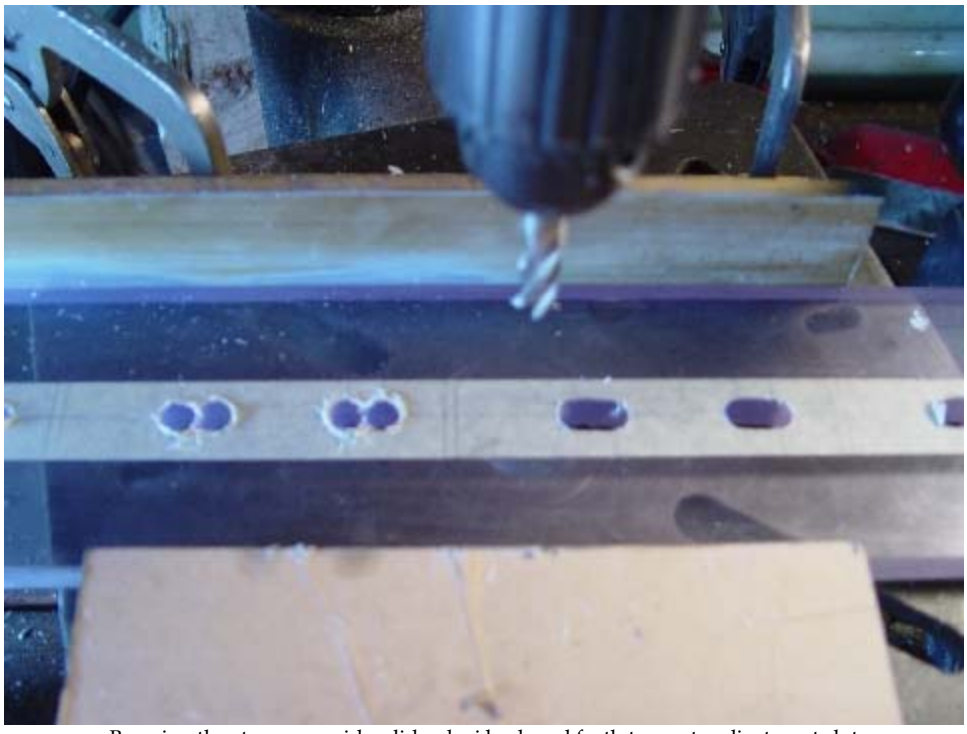

By using the stop as a guide, slide plexi back and forth to create adjustment slot

Use a 3/8 end mill to make slots from the adjacent holes. The mill should have at least 4 flutes and should be spiral. Just force it back and forth until the slots are clean. It's much easier if you do it with a long strip instead of individual pieces. It's safer too.

A stop block centers the rearward bracket component

The vertical portion of the mounting bracket receiving the hole that will provide clearance for the welding rods used as the stator core. Taking advantage of a stop block then allows this process to become quick work as each subsequent piece will easily be properly located for drilling.

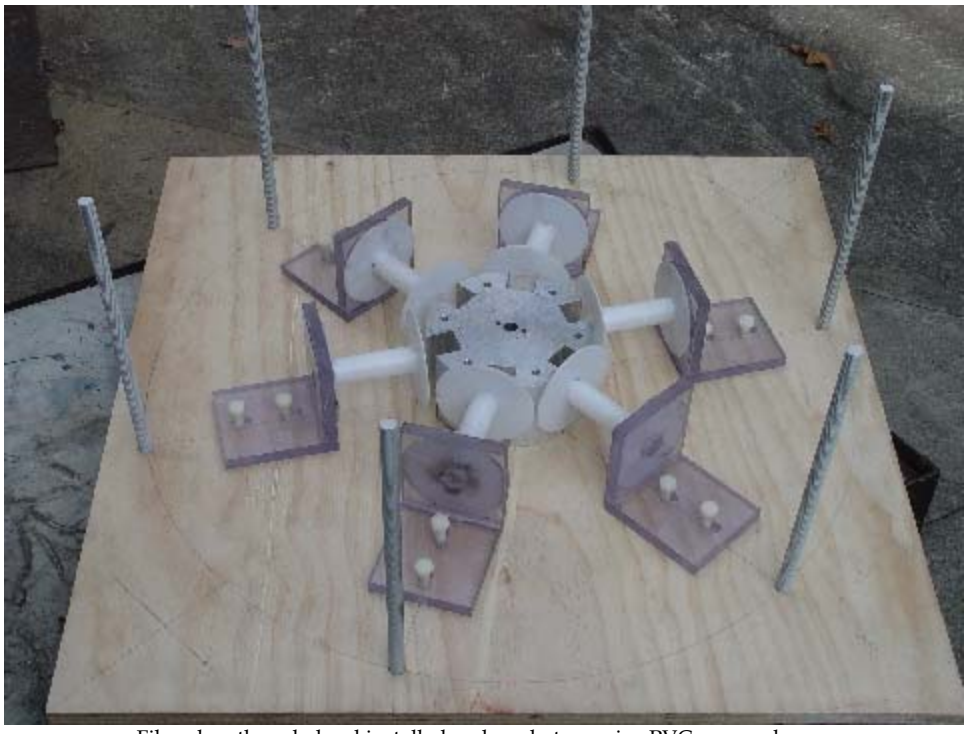

Fiberglass threaded rod installed and ready to receive PVC spacer sleeves

This embodiment of the layout places the rotor and stators within the Energizer framework. Some folks may prefer this because it allows plywood on both sides of the rotor assembly. In the above photo, we also see the fiberglass threaded rod being installed and ready to receive the PVC pipe that become the cross mounting brackets holding the entire assembly together.

In the next 2 photos, you see how I have utilized the PVC pipe as spacer bars that hold the plywood sides at an even distance from one another and allow for the entire assembly to be sufficiently tightened together to make the framework rigid. The end caps provide a means to make the spacer bars snug to the frame tying the sides rigidly together.

Clearance holes are drilled through the end caps

Fiberglass threaded rod now inserted into spacer bars

Below is how the completed spacer bar assembly fits together. This configuration is strong and stable.

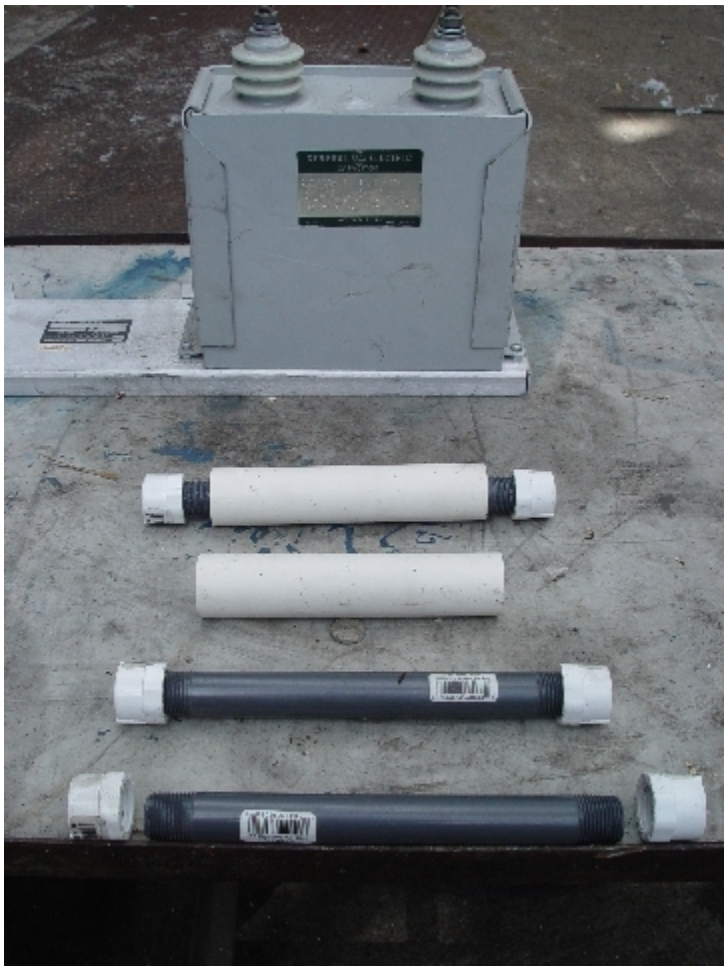

A look at how the components fit together

This is a mock-up illustrating how the spacer bars hold the sides of the frame together. This configuration indeed makes for a remarkably stable framework for the energizer.

Mock-up illustrates how the sides are held together

Once assembly is completed, this is what you should end up with. Towards the rear on either side you can just make out the stabilizer brackets that secure the sides to the base of the assembly.

Completed assembly now being fastened to base platform

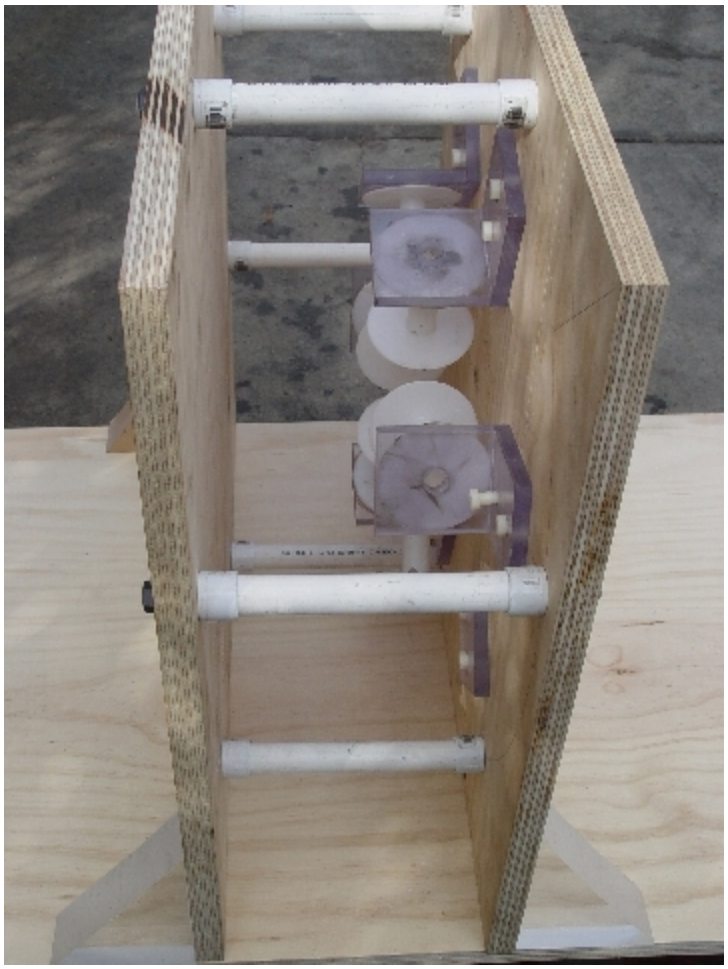

PVC spacer bars provide a solid means of tying the sides together to solidify the framework

Completed assembly of stator mounting brackets, spacer bars and sides. Now to mount the side frames to the base platform. To do this and to add stability, wedges are cut from 1” Plexiglass and mounted in pairs of 2 working as one bracket 2” wide as illustrated below:

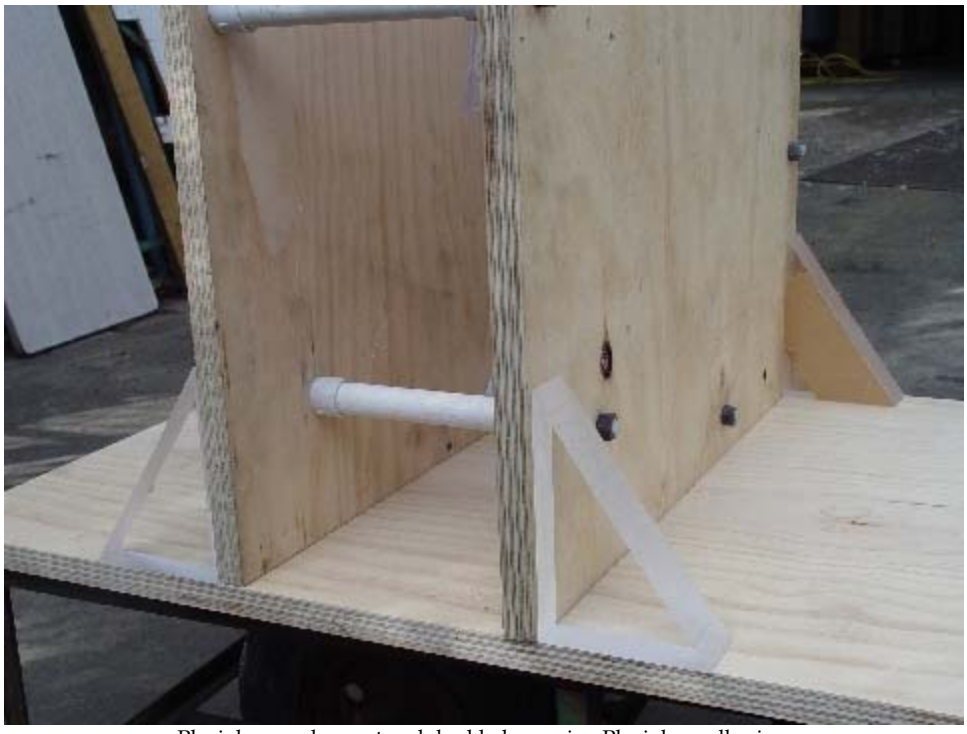

Plexiglass wedges cut and doubled up using Plexiglass adhesive.

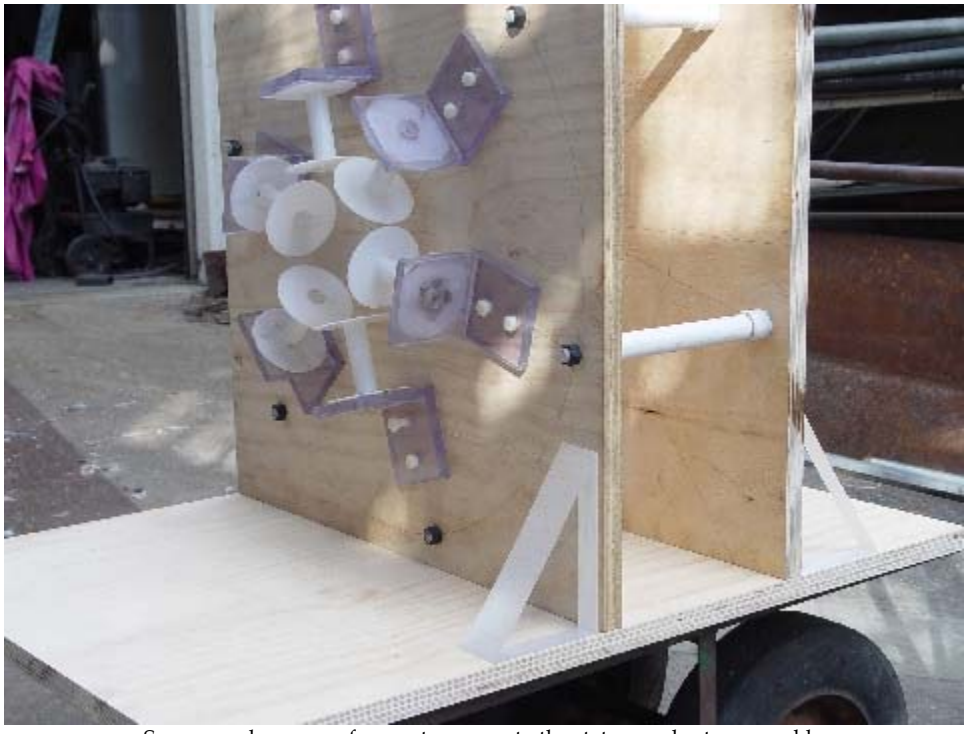

Some people may prefer greater access to the stators and rotor assembly

Another option is to mount the sides together such that the rotor and stators are actually mounted on the outside. This provides greater access to the stators and rotor for adjustments made during running or testing of various configurations. This layout lends itself more readily for those who are still experimenting with their coil size and number of strands etc.

Winding the Coils:

This is the simplest approach that I could find for a coil winder. The 4X4 is from a fence post. You can clamp it in a vice and set the height so it's correct for whichever kid you can grab.

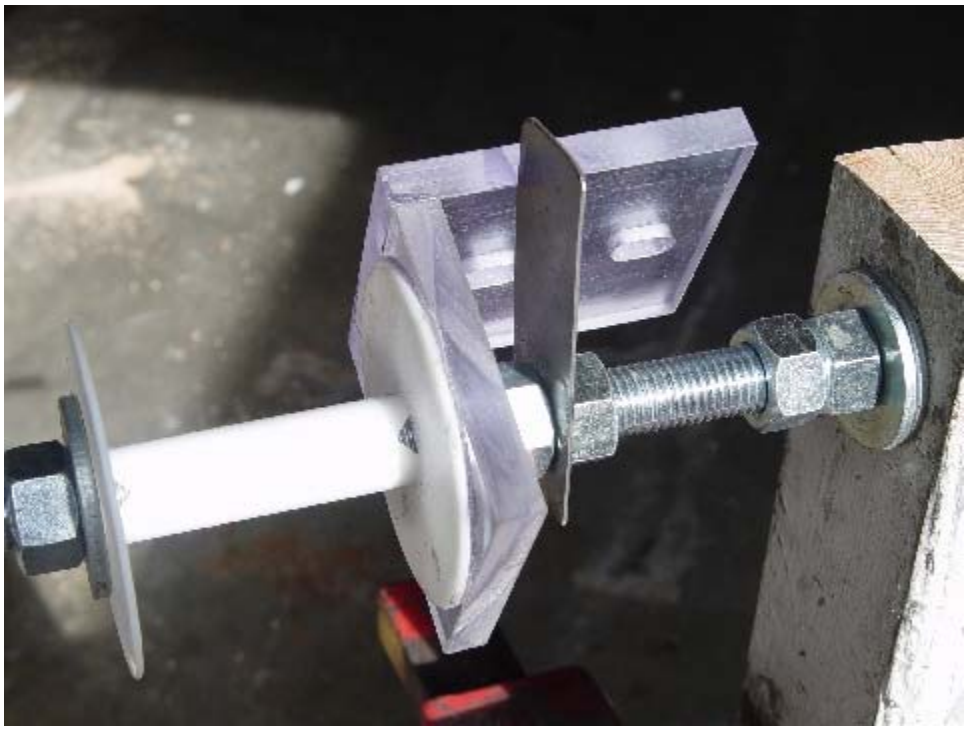

Just bore a ¾ hole with a spade bit. Use ¾ threaded rod to match the ID of the coil. The handle should be drilled for multiple positions. You need to drill a ¾ hole in a small metal plate to drive the coil. It's locked down between the 2 nuts.

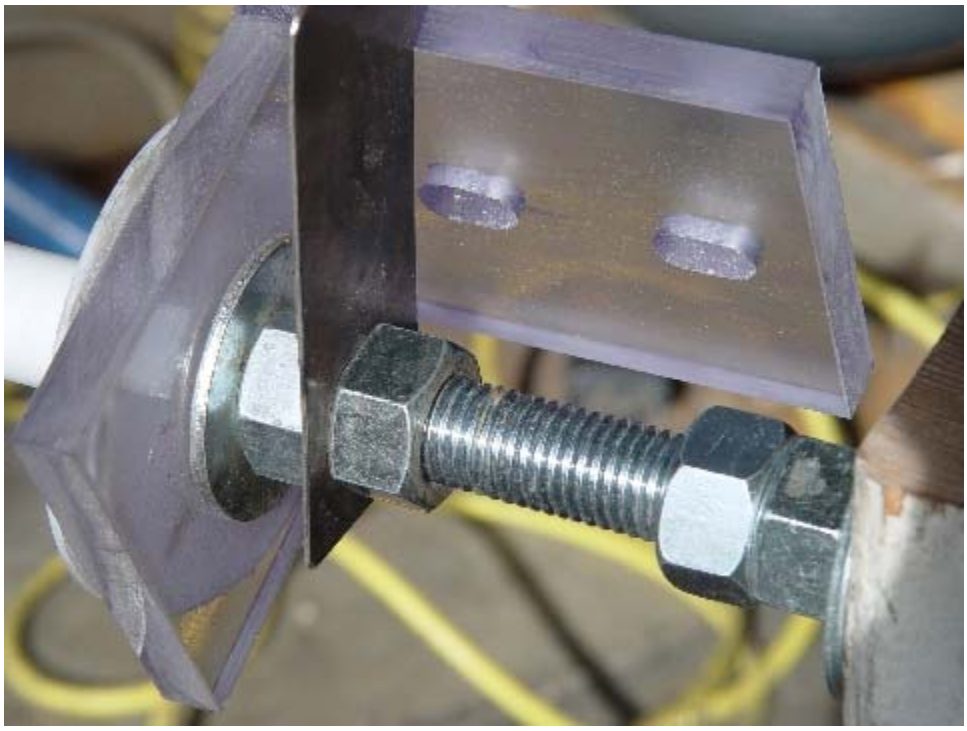

The crank is a ½ bolt with the hex ground down. The sleeve is a piece of ½ inch thin-wall conduit. It's simple as could be and if you can find an electric can-opener, you can motorize the thing.

Mark the center, clamp the stops and drill all of the pieces the same.

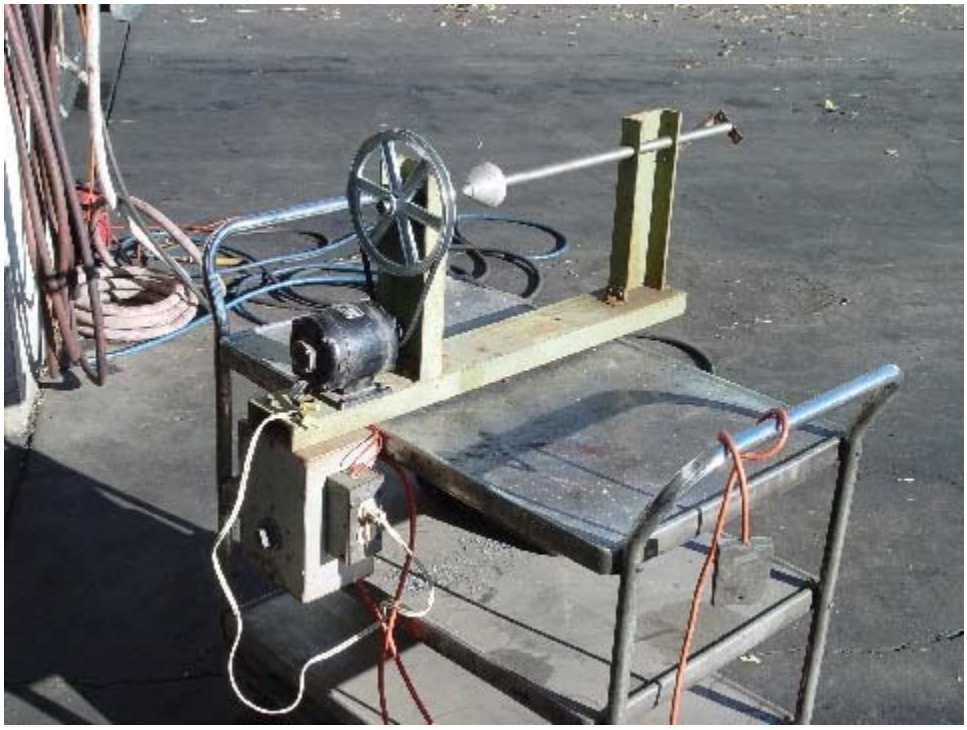

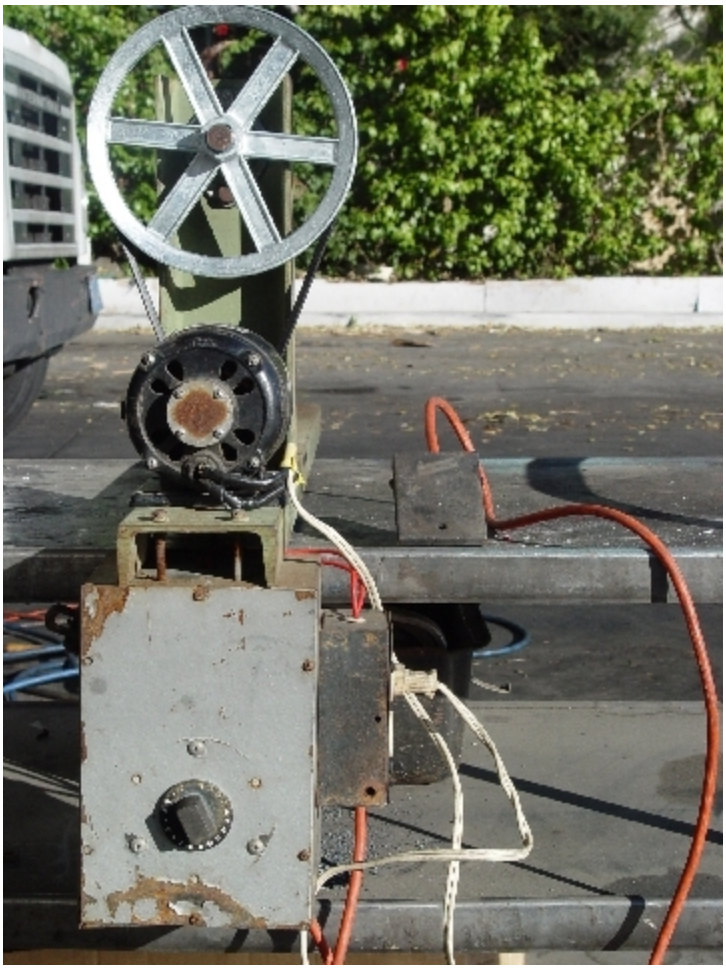

Is just my coil winder

Accessories:

Buy a set of spade drills. They're cheap and they cut non-metallic materials better and more accurately than twist drills. They don't grab either.

Glues for plastic are generally thin solvent cements. That's fine if you're sure which plastic you have. If the materials are unknown or dissimilar [acrylic to polycarbonate] , you should use a thickened universal glue like this.

This GOOP seems to work very well for gluing the spools to the plexi

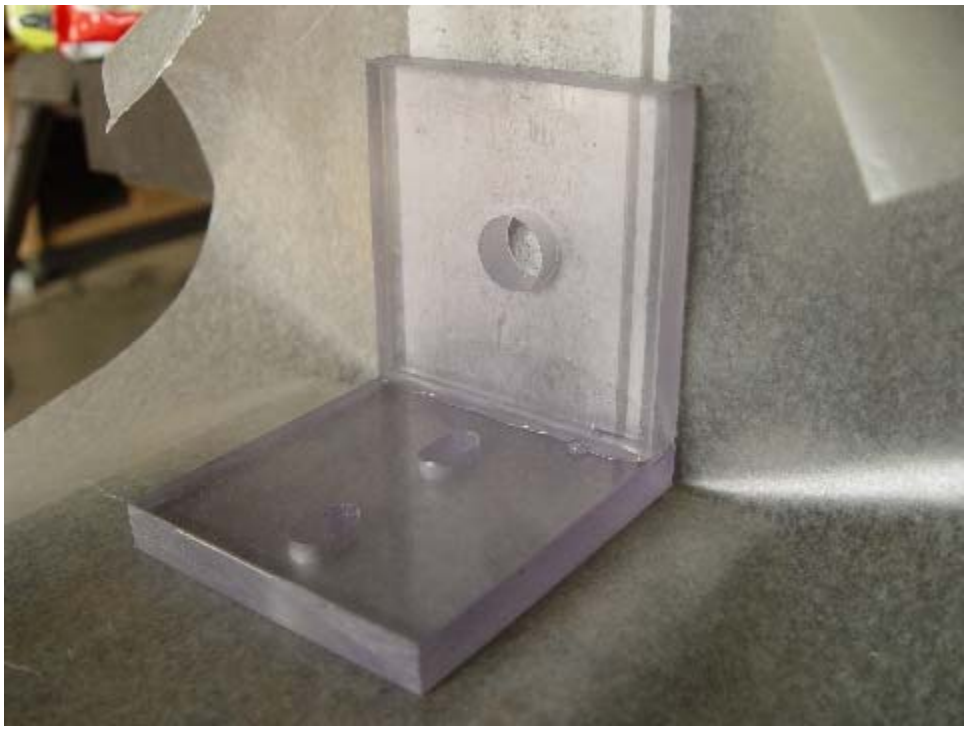

Use a piece of wax paper against a rigid backstop to line up the pieces. Hold pressure on them for a minute or so.

This is a guide block. Drill it on a drill press and then use it as a guide to drill the center hole and the other holes that are beyond the reach of the drill press.

Compass points from Alumicorp? http://www.alumicolor.com/product/rulers-compass.htm

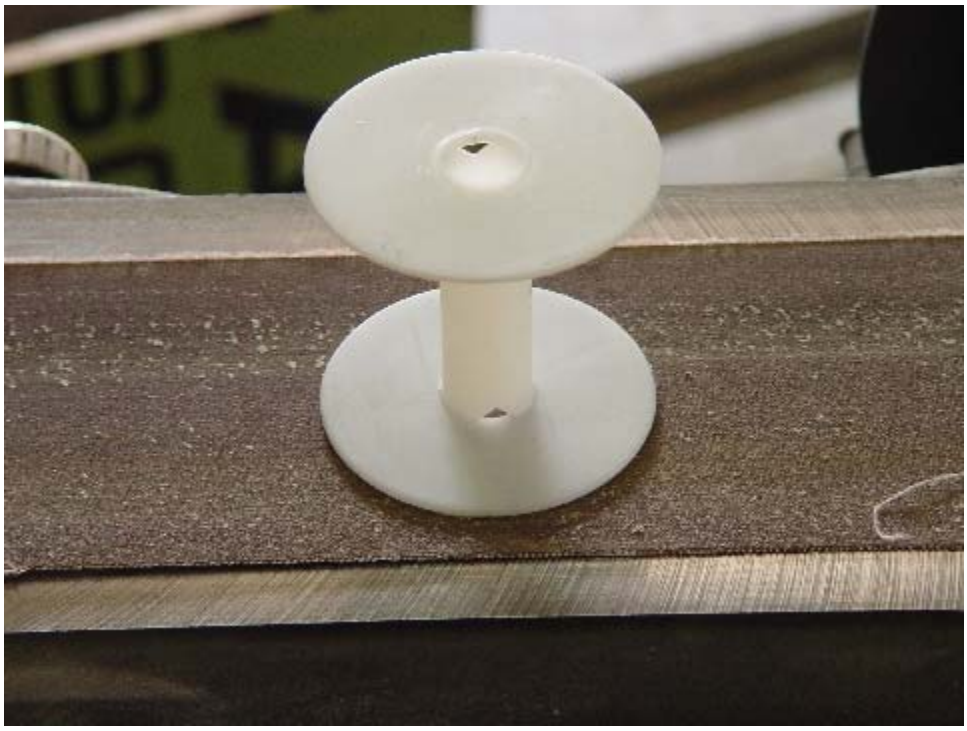

I rough up the spools on a belt sander. The original surface is very slick

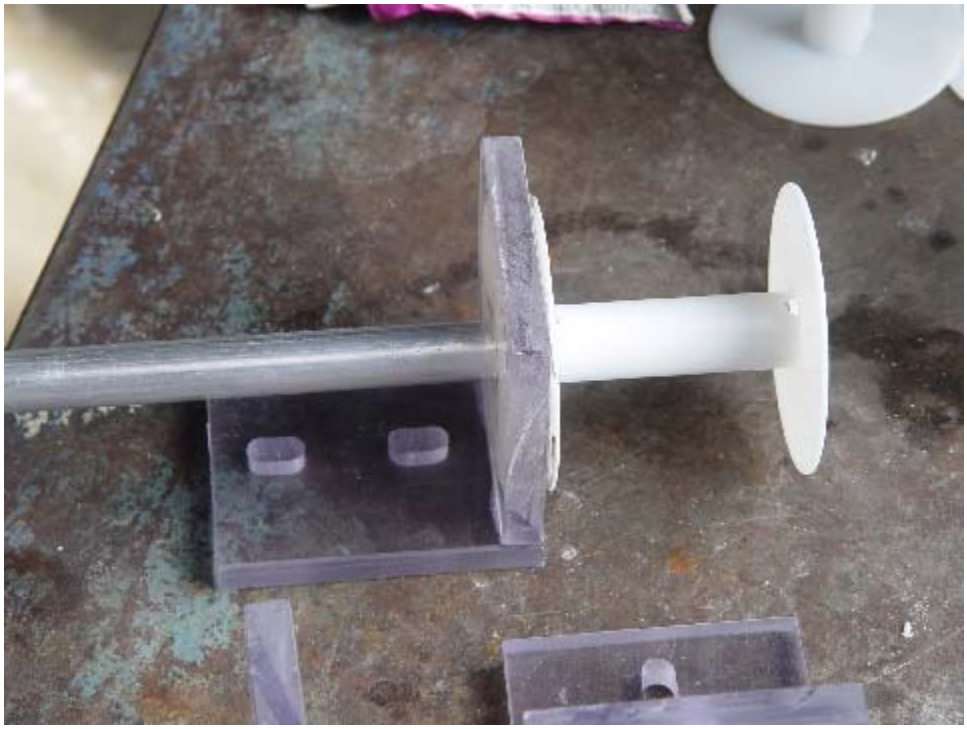

Holding the coil in alignment while adhesive cures.

Multi coil by Introvertebrate

Once you have got to grips with how the motor operates and tuning the circuit, you will be ready to add a slave coil. No trigger coil is required on a slave coil (all transistors are triggered by the same trigger coil on the master coil) so you don't need different gauge wires. You can use just one wire (single filar) for the coil, though you may as well use at least 2 wires to make a bifilar coil just like you did for the first coil. You can add more wires if you prefer... any more than 5 may be a bit excessive though, unless you are making VERY big coils!

The schematic below shows how to hook up a single filar coil as a slave though just add the part in red for however many wires/coils you want to use. This can also be used for making a trifilar Master Coil with two wires powering the coil and one for the trigger coil.

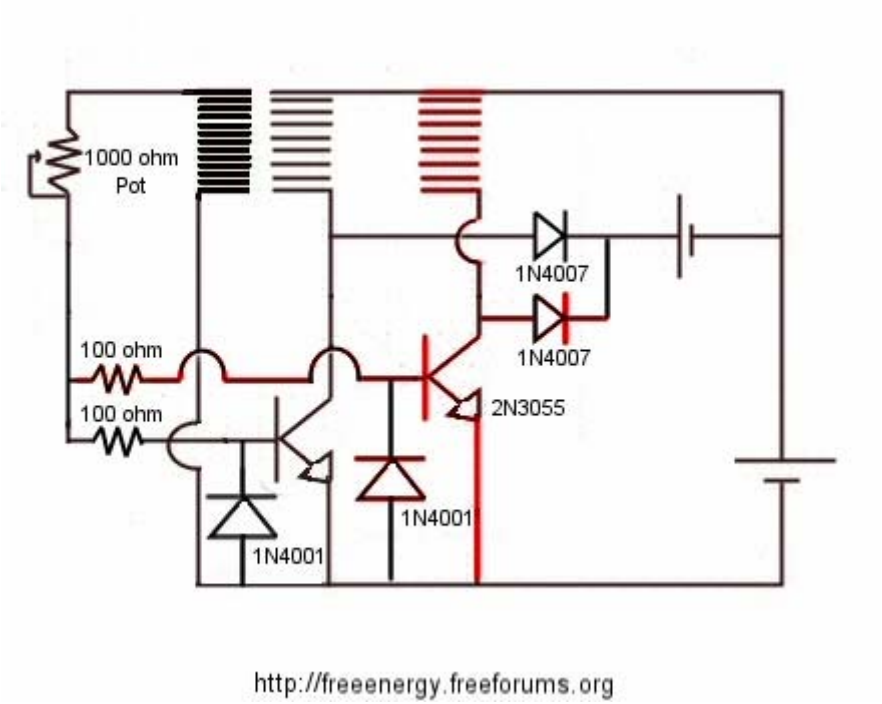

The one thing to remember is that the more coils you add the higher your amp draw will be and you want to keep the amps at the C20 rate of your batteries. If your draw goes above this rate you will lose the benefits of having multiple coils.

You can use as many strands as you like per coil but on a smaller set up probably best to stick to three at max... you still want around 750 turns per coil so if you add too many strands it won't fit on the spool.

Bedini-Cole Window Motor

That's a pretty machine. The first day I met John Bedini, this is the motor that he demonstrated to me. With each rotation, a computer monitor about 7-8 feet away had the picture on the screen shift and tug towards the machine. Very strong pulse! That propeller turns by the magnet on the rotor spinning past the aluminum rotor on the prop shaft. It induces counter currents that turns the aluminum just like an aluminum disc in a power meter. Just demonstrating extracting mechanical work. -Aaron

-If we were in the self-run mode as it does not apply to the SG machine. However it does apply to the Window Motor, AKA the Cole machine. The Window Motor with the correct switching can charge its own capacitor as the motor section requires only 1 to 50 Ma, to run it. It's the switching that is important.

Joe on this group was very close to running it this way, fine adjustments; I don't know what circuit he built maybe he will give it to you as I'm not posting this information again. It is very expensive to built because of the neos involved.-JB

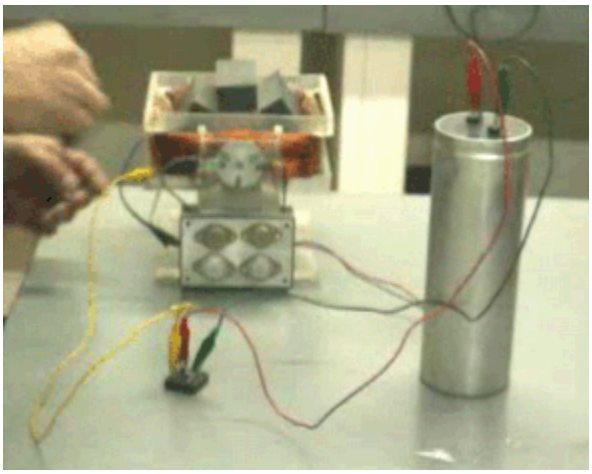

John's Window motor- Source

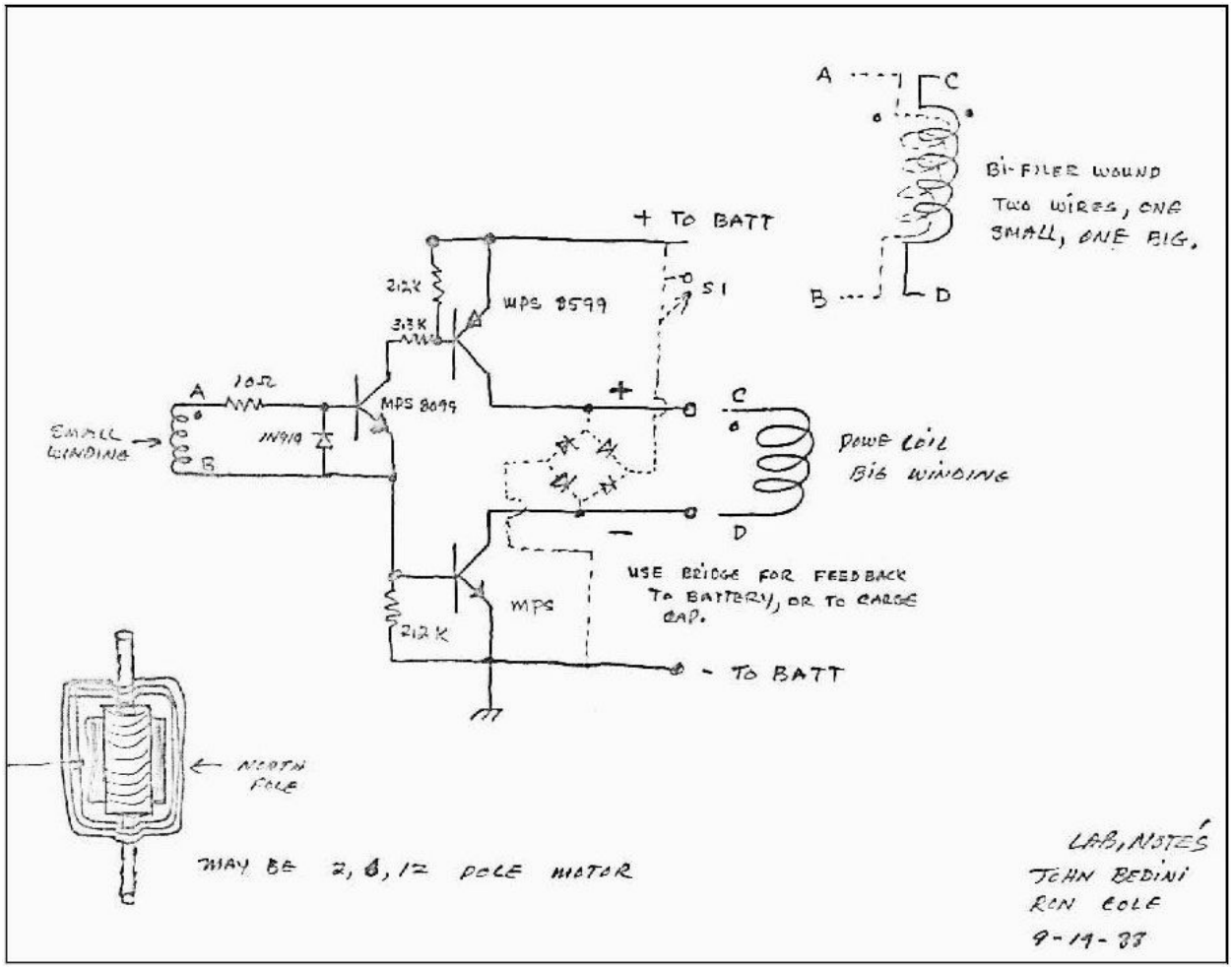

Rick is also providing kits from his web site.

Notes from Rick on the recovery side- With the general setup you either have a strong motor or you have recovery. There are several circuits that John has published, and several options within each. You can have strong torque and recovery as well, but it has to be out of phase–that is the motor and charging phases. It is all about the right geometry in this system. Very critical.

You can run the window motor with an SSG circuit and this is how we run it to get things started and to see if everything is working right. This gives you recovery on a two battery bank system. The second is the three transistor bipolar circuit that is preferred over the SSG, this usually how we run the window motors. But this is half the circuit for this motor. The Full circuit is two of these circuits out of phase with each other. This can be run for maximum torque or with recovery.

Let's just say that it takes way more watts than that to do that kind of work. This circuit can have more options to it for recovery and self-running operation, as John showed

later with the cap. As the two circuits are out of phase with each other, it can be used for self-running purposes. You have two sets of halls and three magnets, with 6 poles.

The key to these systems is the geometry. The more powerful the magnets the easier it is to get what you are after. However, if the magnets are too powerful then you have to make sure your magnets are rightly placed. John's lab notes show what is ideal in this respect. On my largest setup I used as powerful magnets as I could to stay within the ideal geometry. For if the magnets overlap each other then you will not get the generator action as you desire. So this must be understood or you will fail. On this one setup which I never presented for lack of time, I ran it for about three weeks on one small tractor battery and the voltage slightly climbed and stayed there.

The timing was critical and because the pot I was using was unstable it was hard to find that sweet spot. What I did was use the half circuit and two forms of recovery into the only battery. The one form was using extra windings to be timed into the battery. And the other was to have another external small coil out of phase with the motor windings and feed that into the cap and battery. It wasn't that hard to do and the thing just spun and spun for weeks, with the wires hanging down until I needed them for other experiments and had to finally clean up the shop. As I used larger and larger magnets there was more and more power available.

I witnessed John do the same sort of thing with his motor and I video some of that and put it on my website. On a smaller system with relatively weak magnets it will take some time to get the timing perfect to run it off a cap as far as I can see. But with larger magnets it becomes much easier-Rick

Original Schematic can be found here

Step by step Window motor commentator

Recommended back round reading on the Window motor

Johns Window motor Running

Back up on Google video

Energetic forum discussion

Bedini-Cole-bipolar-switch

Fan kit

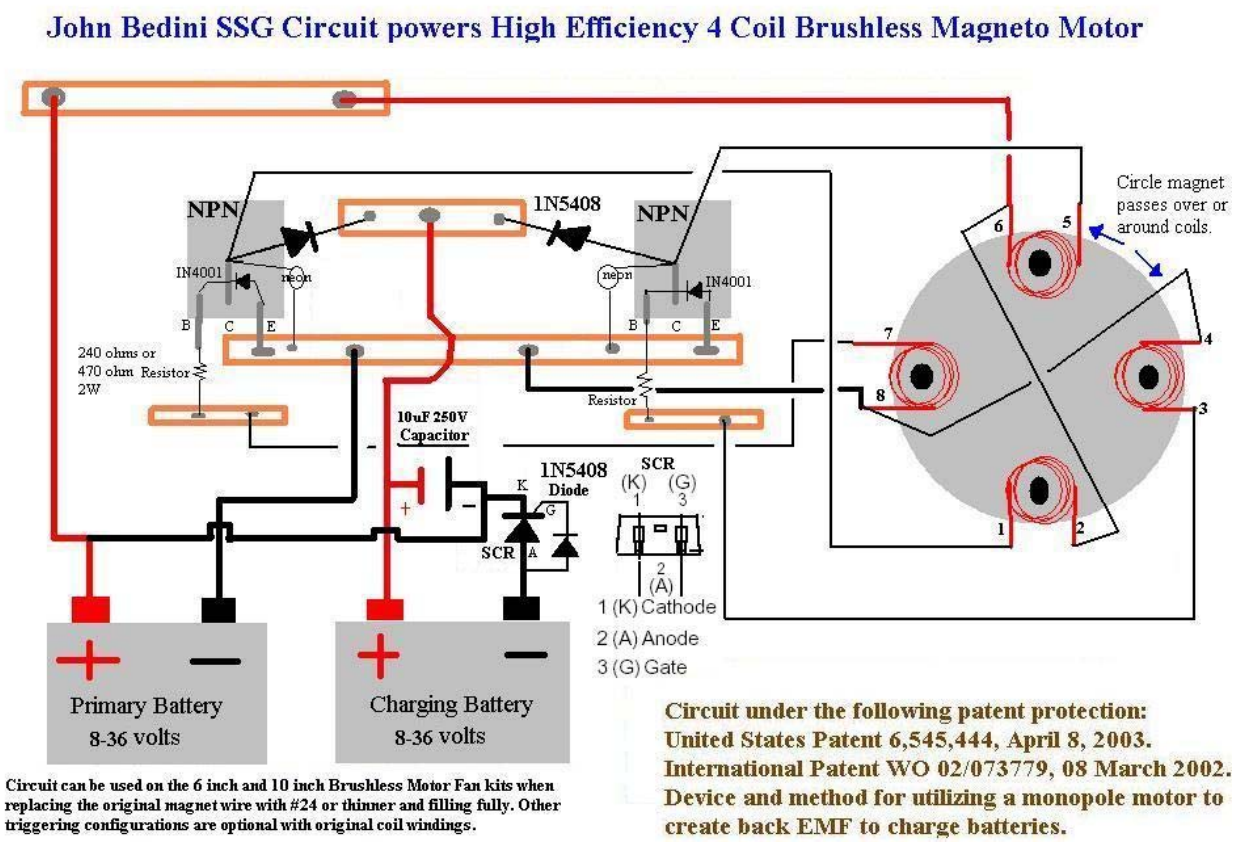

Rick states- "*We found that depending on certain factors they will be over or under unity (as preliminary set up). Same things apply as we have said about the monopole motor. So one fan, when it was converted to an energizer, gave much greater efficiency than the original motor because the windings were replaced with thinner and more wire (however, it was limited in maximum speed at 12V**). Just counting the primary battery it produced more work for less energy than the original circuit did**. Then you add in the secondary battery recharging and you have a whole additional factor to add in. But the other identical fan I used larger wire that was shorter and I got nowhere near the efficiencies, and worse than the original, but I did have the ability to produce much more work/speed. So you have to keep these things in mind.*

In addition, I will repeat, you have to consider the condition of batteries you are using. If they are sulfated then your first objective is to clean it all up, and that may take some time. Thus your efficiencies will improve over time. Then finally you have to consider the capacities and voltages of your battery banks. With these things understood by experience you then have all the free energy you need. It is as simple as that. The kits were just spoon-feeding everyone, but have nevertheless been a success.-End

Ricks brush less fan kit does indeed show interesting RE (radiant energy effects). In fact, if one feels the amount of air coming off the fan and then times how long that battery lasts running it. Then compares running the same fan (unmodified) using the same

battery to get the same air flow, how long will these batteries last? Not as long as Rick's modified circuit (the Bedini circuit). Also by using the circuit, with the conventional fan, you don't get to recharge a 2nd battery!! **So the proof is significant in this regard.**

Panacea Bedini Fan kit Motor charging two batteries

There are a number of variations to the theme, you can opt to tie all coils together in series and run off one transistor (this would require bifilar winding) or series opposite coils and use one set for trigger and the other for power, which is probably easier. Try about 500 turns of a fine gauge (30awg -34 awg?) or count turns until the core is full. Bigger fan will be easier to wind, and make sure all windings are wound the same way.

There are variations of this circuit employing a SCR and cap, but stick to the basics until you have it running. You can fabricate your own from scratch (see this Video Ren made for an example YouTube – pulse motor) but the fan is a good idea because everything is prefab'd and will be allot more accurate.

Step by Step Fan kit tutorial video's by ImhoTep and Shiva

Step by Step Instructions to building a Bedini-Imhotep fan for your free energy needs! View in High Resolution and full screen and with the volume up high to get full effect. You can download with firefox and its extension "download helper". When the power is out and the stores are closed and you cant get batteries use this device to charge normally cannot charge. Alkaline,lead-acid,carbon-zinc can charge up to 10x without any problems. Any questions can be asked here or for more information visit: http://www.energeticforum.com/renewab...

Imhotep – Bedini Fan Project Part 1

Imhotep – Bedini Fan Project Part 2

Imhotep – Bedini Fan Project Part 3

Imhotep – Bedini Fan Project Part 4

More Videos By Imhotep and Shiva

http://www.imhotepslab.com

Fan Kit Battery Swapping by Phil

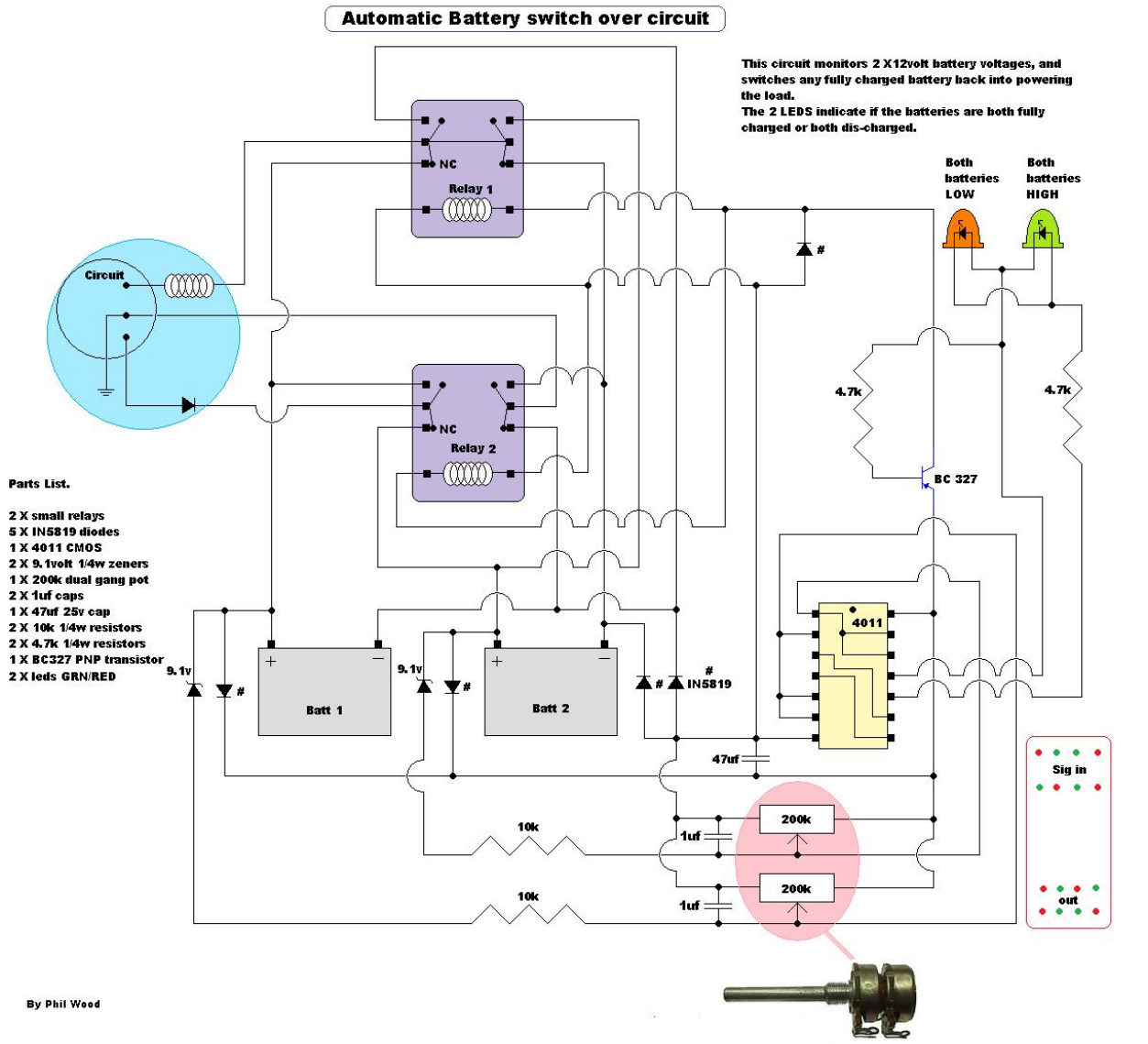

The 4011 is not the main switch in this circuit so obviously some people have no clue what they're talking about. It is designed to switch with no 80eservo input threshold, as the zener diodes are for this application.

The 4011 is there as a link you could say, as to fire the transistor and it is there as to activate from the lowest possible voltage and be extremely sensitive to any voltage input.. Hence why I chose this particular chip and not a 80eservo triggering device that will make the adjustment for the battery voltages switch times a little more difficult to tune.

The main thing I was focused on was the relay combination and these can be switched by anything, and to be honest they can be activated with no chip at all, but just a

transistor. Ideally the circuit would be made using Mosfets and no relays and this I will work on soon.

Anyway, while the experts squabble over how the relays should be fired, if you can't find a 200k pot, look for something a little higher in resistance. If not mate, just get 2 X single pots (not gang dual) around the 200k and you will need to adjust each one to the same value.

I just did some calculations and you will be ok with the dual gang 100k pots. That will be a 50k resistance total so not to much to be concerned about. I just check through my stock and I don't have any 200k pots either or I would have sent you one down. So go with the 100k mate and it will be all ok.-Phil

Measuring mechanical output of the fan kit

You do this by simply by running the fan unchanged first and see what the CFMs are as listed by the manufacturer. See the RPM. Then run the fan modified with at the same rpm. Below is an example off one of Rick's fans.

Koneheadx Fan Generator

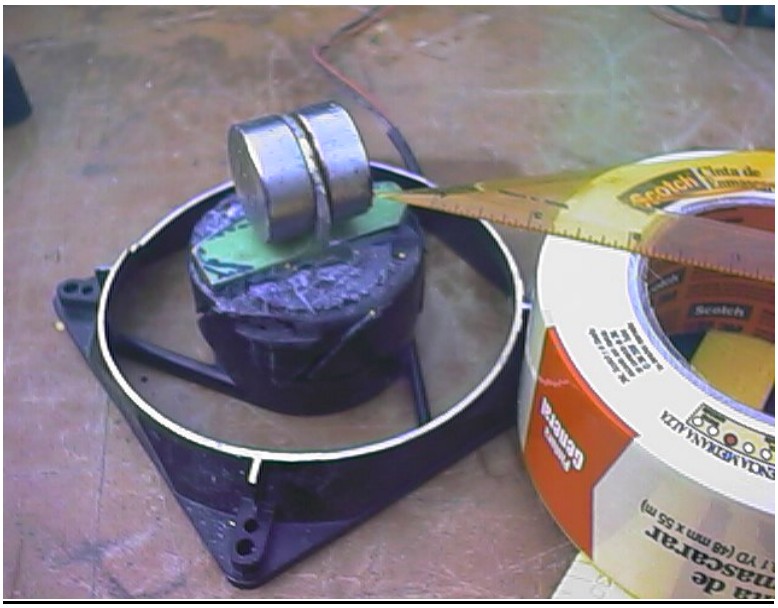

You can make a neat little generator out of them too by mounting a neo magnet perfectly balanced on top and spinning it like a top with air coils on each side – make the coils fairly big so the magnet actually revolves halfway inside the coils is best way I think – this should not affect what you are doing already with Rick's kit either so you can get twice the power going on.

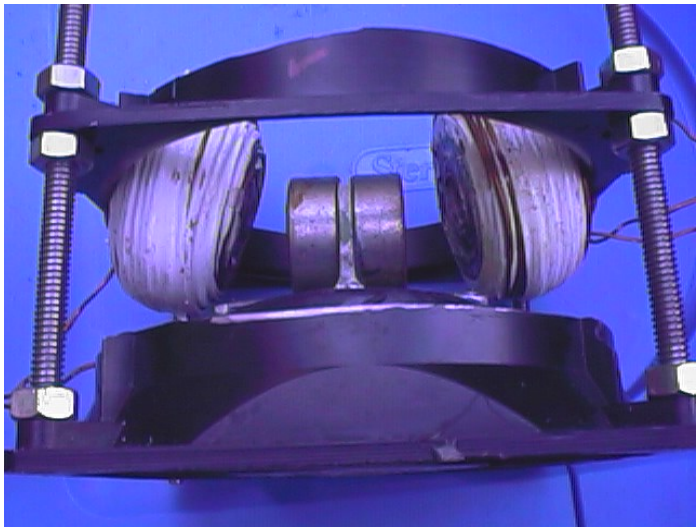

Also every time Kone had done battery bank swapping long term tests, if something does go wrong and the voltage drops suddenly, it almost always is one of those diodes in the bridge has failed, and the battery starts to get an AC signal feeding it and so the battery sinks quick and will be destroyed eventually so check that out with your golf

cart battery tests Also you might have some old golf cart batteries that are already worn out too.

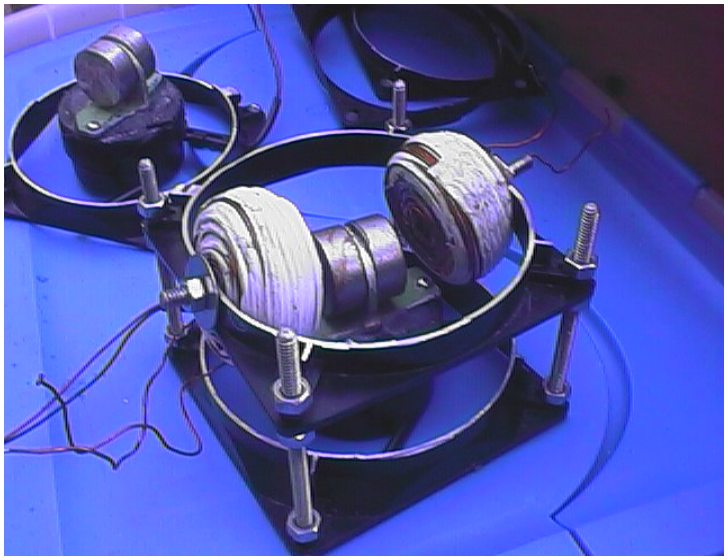

Lidmotors Bedini Fan kit with the Imhotep Radiant oscillator

Video- YouTube – Finished LB

Extra non reflective recovery

Background and circuit –Imhotep Radiant

Battery swapping links

Mart's You tube channel http://www.youtube.com/marthale7

Automatic switch over by Daftman

Daftman claims to have his Bedini hybrid running for months from the same set of batteries with an automatic switchover when the run battery gets low. If this is true, then it could just be made bigger so that a generator could be put on the shaft at a constant load.

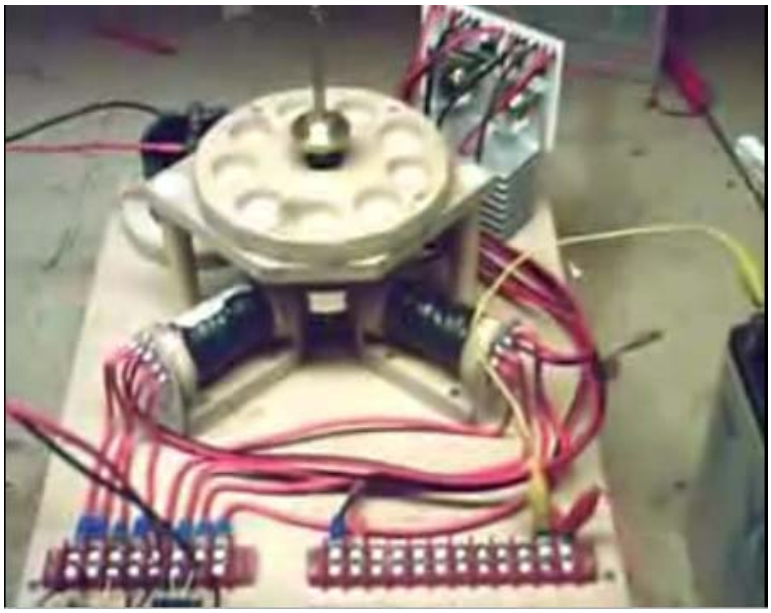

http://au.youtube.com/watch?v=S96MjW-isXM

Also for more variants of Bedini circuit configurations, please consult the Daftman's forum and video channel.

Jim Watson machine

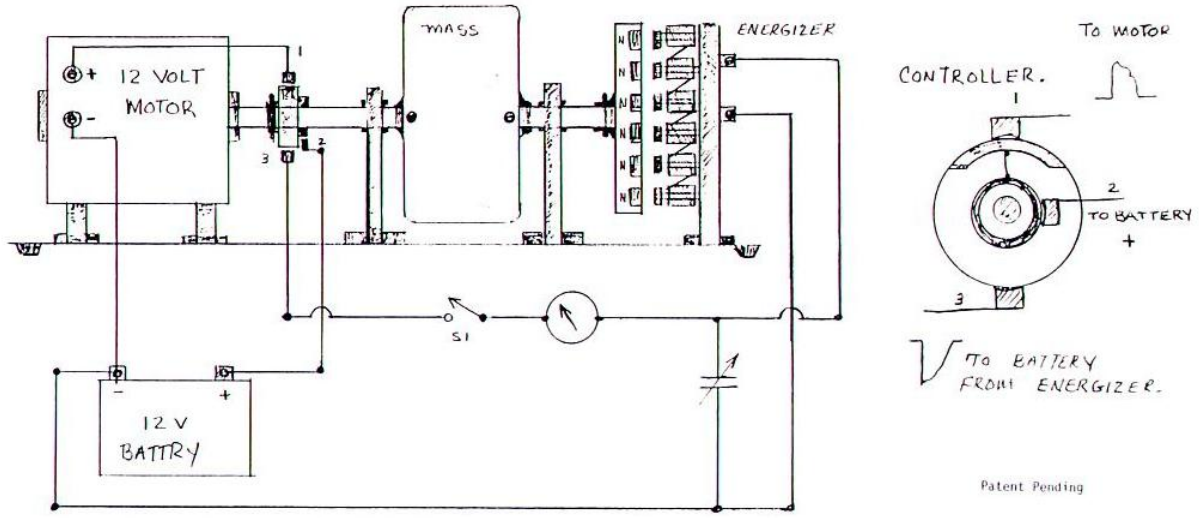

Figure 16. Bedini's Test Model No. 2

John Bedini emailed the private builder's group last year to say that one particular embodiment that Rick Fredrick made of his SSG was exactly like the Watson machine.

John Bedini never came out and told us the schematic of the Watson machine until AFTER someone had stumbled upon it. Rick took the basic one coil SSG that we are all familiar with. Then he added one more coil 180 degrees away, making 2 coils total. This new coil has its wire go to a full bridge. The output of the full bridge has its negative terminal tied to the drive battery negative, and the other positive terminal to the wire between the drive battery and the power coil.

One more item to add now is a relay to separate this power source. That relay is specially timed with respect to the trigger transistor turning ON/OFF. This configuration is what Rick Fredrick described as his "self runner".

Quote- As far as I can see the Jim Watson Circuit is nothing but normal electricity charging up caps to 10X higher voltage "Bedini quote" and dumping this charge into the batteries being charged. If this is actually true then the same thing could be done using the output of an inverter charging up the caps and dumping them into 12 volt batteries with a relay. –End

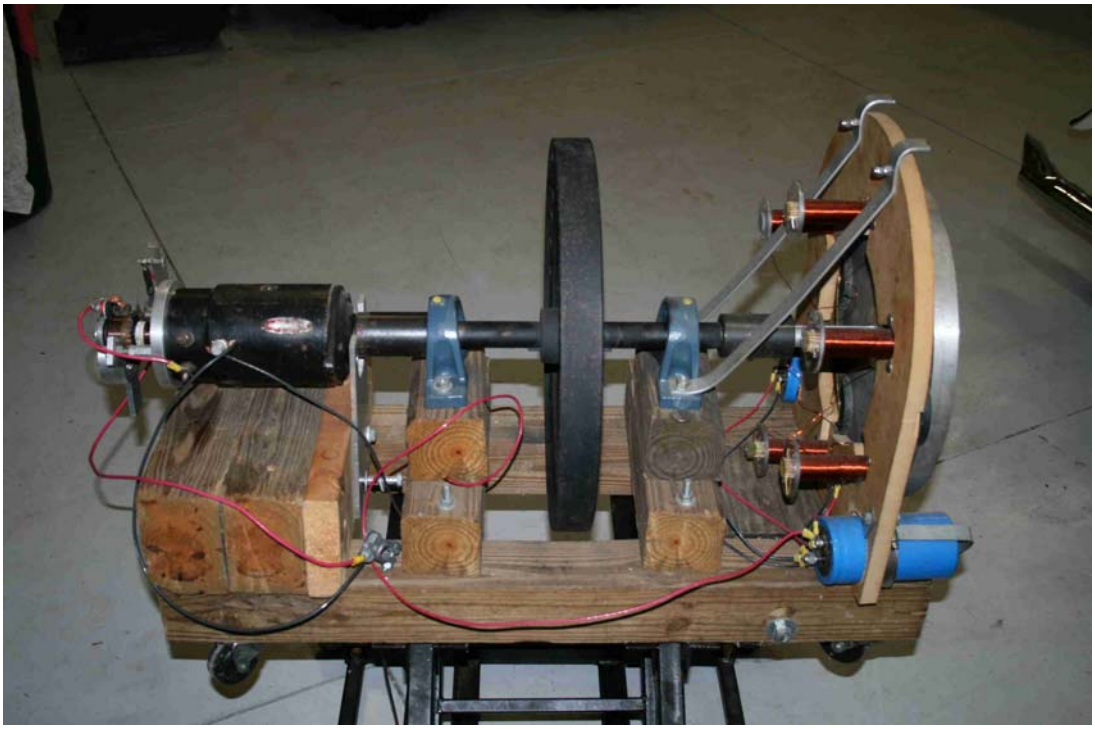

Jim Watson Fly wheel replication

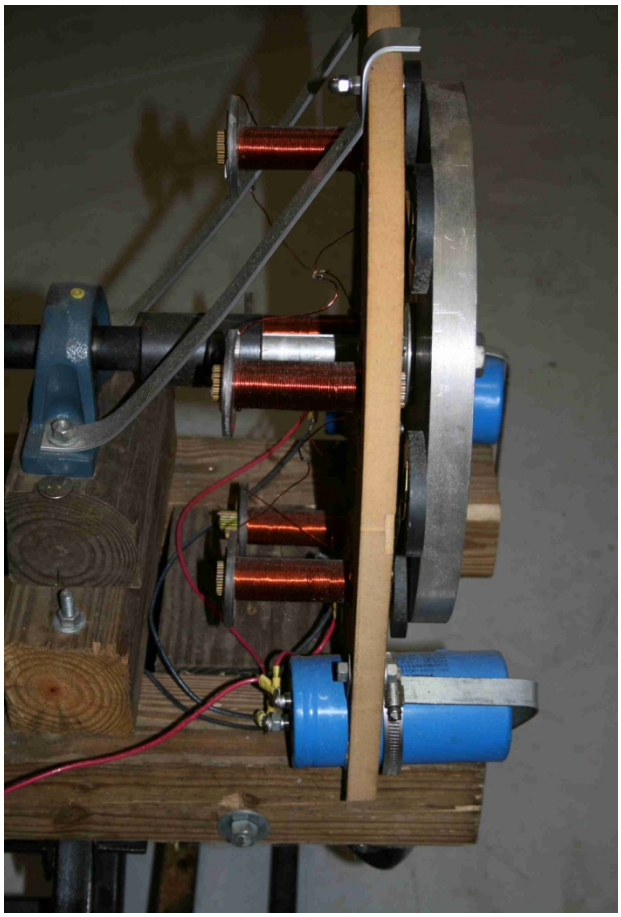

Energizer end

Email on the Watson machine given to Panacea by John Stout

I can tell you exactly how the 12kw generator worked. You can decide for yourself if it is overunity. John told me this himself in the early 90's. If I remember correctly the motor was an aircraft starter motor hooked to the flywheel that spun magnets past coils, john told me the number of windings on the generator but I do not remember, it seems like they were one layer deep. John keeps careful notes, if you email him he will likely tell you. The magnets were Standard ceramic magnets. The motor was pulsed. The coils on the generator coils were simply fed to a bridge rectifier and charged up two 800mfd motor run capacitors. [you can see these on the side of the motor/generator. No back emf here. Actually no back emf anywhere, when a circuit is turned off current doesn't reverse it continues going forward. Anyway if I remember correctly the capacitors that you see on the side of the device woud charge up to a value I think it was 110 volts, maybe 220 volts, remember this conversation was about 15 years ago. The voltage would trigger the coils on the large relays. Yes just simple large relays with [I THINK SILVER CONTACTS],that would discharge 1600 mfd capacitors, yes that's 1600mfd at 110 to 240 volts into 12 volt batteries. "AND" "I ALL THERE IS TO IT FOLKS." John told me the relays would clack every few seconds and that the batteries would boil in a very short time.

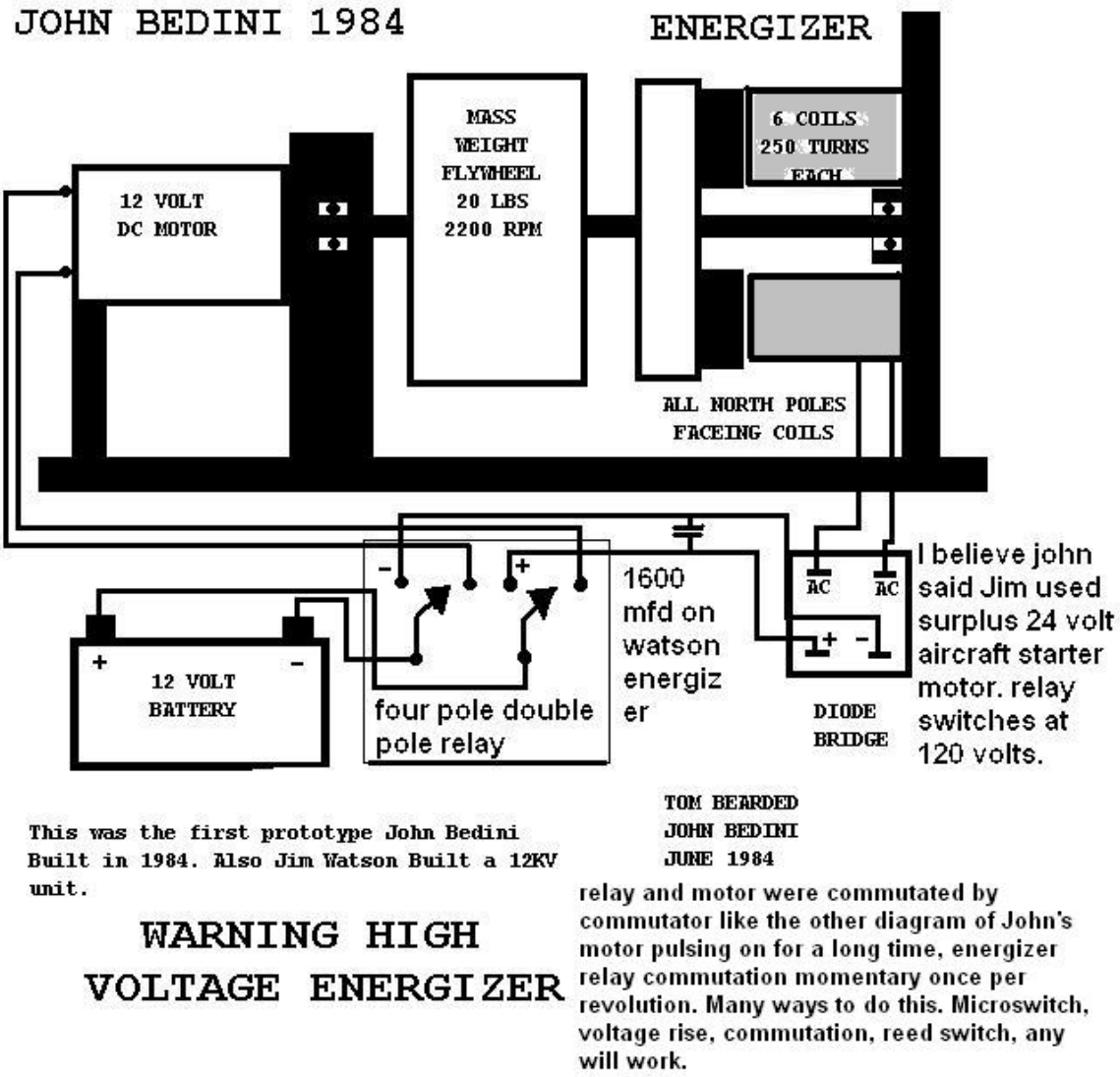

You might ask do I believe this is free energy. My answer from experimentation: No, I believe this is the surface charge illusion. PLEASE CHECK OUT THE DAVID BOWLING THREAD ON OVERUNITY.COM. Has this been tested and proven to work or not. My tests say not. My batteries would die after a given period of time and would have to be charged up in the normal fashion.

According to what John told me what is missing in this schematic is the full wave bridge rectifier and the 120 volt relay. That is what he said was used in the Jim Watson energizer. I can't see why the motor couldn't be an RV. I love the simplicity of this setup though. It uses a weightlifting bar with what looks like a 50 or 100 pound weight which has a locking mechanism already hooked to it. I would have ended up with a lot of money paying for stainless straightened motor shaft material and paid extra to have it straightened and balanced. I love the simplicity. The capacitor might be too big.

Watsons large 12000 watt used two “800” mfd caps if my memory recalls from my conversation with john over 15 years ago. So don’t take this to the bank. John however takes notes on everything he does and I’m sure he has them still.

Bedini Pendulum replications

http://au.youtube.com/user/smw1998a replication

The circuit you see in the video is the basic SSG circuit shown in the "Mutual Inductance" video. The SSG circuit driven by a pendulum will charge a battery but it does it very, very slowly.

The Milkovic 2 stage oscillator is really interesting, and I have always been intrigued by mechanical action devices. Watching the pendulum swing back and forth, I immediately thought how cool it would be to use a Bedini Pendulum with the device. It seems that very little battery power would be needed to keep the pendulum swinging, and that keeping the run battery fully charged should be no problem if switching is employed.

YouTube - Replication of John Bedini's Pendulum Energiser

Built by the Daftman

Pulse pendulum by Mopozco

The Bedini pendulum, made one with the C-shape core and 7 wires coil (2 as a trigger coil, 4 as a power coil, 1 to led; all on the same core) and tried with different types of commutation (hall, reed switches, mechanical contacts). It runs either way, depending which side hits the top first. There's a power source - 9V battery.

http://www.youtube.com/watch?gl=AU&hl=en-GB&v=WZ9JRmr5YcI

Bedini Solid State Oscillators

The proper Solid state circuit is listed in the Free energy generation book. Please consider purchasing this book to support John's efforts.

Before constructing or experimenting with the solid state charger it is important to realize the following:

John Bedini has always stressed that it's important not to over current charge with high voltage spikes as this will 'smash' the battery in time. A 7A/Hr gel battery is fine on a small wheel charger like the ones specified for learning but not on a powerful rotor or SS energizer.

If the final battery voltage can be monitored so that the charger cuts-off when the terminal voltage reaches say 15V then even small batteries should be OK on big

chargers if they are well conditioned to start with. Otherwise, if they are not conditioned, pumping high current into them will just push up the terminal voltage fast and cut-off the charger. Battery conditioning needs to be a staged process starting gently until the internal resistance drops to allow an increasing charge current. A variable voltage supply to the energizer helps to regulate the charging current with solid state chargers.

I have learnt not to allow my batteries (once conditioned) to be regularly charged to a high terminal voltage when using Bedini charging methods. This is only needed occasionally to equalize the cell voltages. My normal fully charged float voltage is within the battery manufacturer's specification at around 13.8V. The final terminal voltage for my golf cart type batteries is limited to 15.3V.

Note-The way I check that a design is not going to damage a battery is with the Bedini '1 ohm test'. This checks that the current output is limited to less than 1 Amp when the battery is removed and replaced with a 1 ohm resistor. A reading of less than 1 volt across the resistor will pass this test. When scoped across transistor collector / base junction the waveform should collapse - reduce substantially in amplitude when the 1 ohm resistor is connected.

The problem arises when the battery reaches its fully charged voltage of and is then overcharged by excessive current. It is very easy to overcharge and damage gell batteries with badly designed chargers. I have built many variations based on the Bedini monopole energizer and damaged plenty of batteries. It is easy to make a radiant type charger that can charge the hell out of a battery but a good design is a compromise between charge rate and the ability to condition a battery in order to give it long life and good service.

Solid state circuit by Aaron

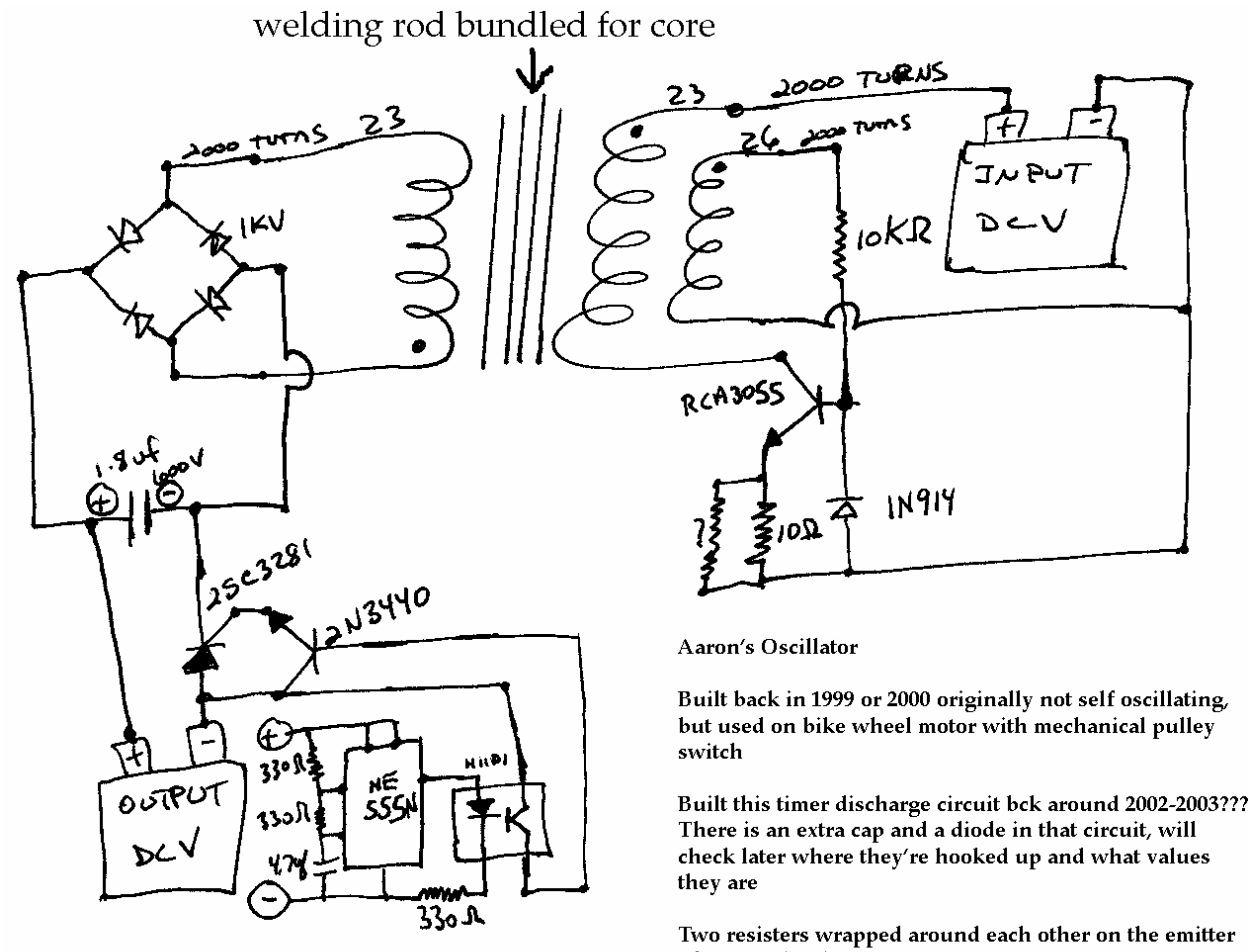

LEARN MORE AT: HTTP://WWW.ICEHOUSE.NET/JOHN1

Aaron's Oscillator

Built back in 1999 or 2000 originally not self oscillating, but used on bike wheel motor with mechanical pulley switch

Built this timer discharge circuit bck around 2002-2003??? There is an extra cap and a diode in that circuit, will check later where they're hooked up and what values they are

Two resisters wrapped around each other on the emitter of power circuit.

List of parts from Aarons diagram for SS
Upper left down

(Bridge rectifier) I guess I could use 4001 diodes.
Capacitor 1.8 UF at 600V
2sc3281 transistor
2n3440 transistor
330 R (3)
4.47 uf capacitor
555 timer
23 gauge wire enough for 4,000 turns,
26 gauge for 2,000 turns
10K resistor
RCA3055 transistor
7 ohm resistor
10 ohm resisto

Aaron recommends using H11D1 optocoupler . In the picture you can 2 resistors he had in parallel for some reason. You only need one and it probably won't be a 10 ohm. It is recommended to get the Free energy generation book to find the right resistor values.

For increasing the current on the Solid state it's as easy as decreasing the resistance on the 1k pot on the bd243c base. The trigger pot is what controls the current in the bedini SG/SS circuitry. (it has no effect on voltage as I the same and defined by whatever source you use.) For the two pots you added. Those should "replace" the 330 ohm and 100k ohm resistors on the 555 circuit. That wolfstone link I sent offline, bottom schematic shows how to make it so you can have duty cycle on time of less than 51%. Then you can dial in any Duty and Frequency you want on the discharger side. Most of bedini's default pulsers use the generic 555 layout and don't go below the 51% duty timing, however.

Lastly the Amp draw on the front end only changes somewhat the time it takes for the battery to charge as increasing it puts more current into the flow going into the battery. Increasing the amp draw doesn't always increase the charging in the right way. The battery seems to take its own time to charge to the various voltage levels and putting more current into it to try and speed it up is probably why the current hot charging method destroys the batteries plates.

Solid state by Clive

I have built a 17 strand single coil charger using 19swg (18awg) x 100ft strands. I use this to charge a 460 A/hr golf cart battery set. I'm not at liberty to post the circuit schematic as it is mostly a Bedini design. It is based on a simple solid state blocking oscillator circuit which drives additional transistors from a common trigger circuit. The oscillator produces extremely fast leading edge pulses which is essential for good performance. Each transistor output is taken from the collector via an ultra fast single diode to a common output bus for connection to the charging battery. All transistors are MJL21194.

The coil former is 7" x 5" with an air core. My 100ft trigger strand is wound on first, followed by the power strands in a 4 x 4 configuration (4 x 4 twisted strands).

A big single coil multi-strand charger is easier to build and get running than a multi-coil, multi-strand charger because the magnetic fields collapse in synch using a single coil where all strands are wound together. This gives a more effective discharge spike.

A big charger like this needs a good power supply which will deliver at least 10Amps. The average input current for my charger is about 5 Amps but the peak pulse current is much higher. For good erformance its important to get the impedance very low using a big cap across the supply lines. I use 8AWG conductors for the input power supply and the output output charging leads. A fuse or preferably circuit breaker is essential in the supply line for safety reasons to prevent serious damage in case of a transistor failure

resulting in a short circuit.The Bedini '1 ohm test' replacing the charging battery should give less than 1volt drop across the resistor, as with the normal SG monopole energiser.

As I understand the test, a 1 ohm resistor is simply placed across the output in place of the charging battery and the DC voltage measured across the resistor. The voltage should be under 1V to pass the test. If it is above, then too much current is flowing into the battery. I have not seen any limitations given to the size or type of energiser, so I assume that this test applies to all energisers.

John Bedini calls this 'breaking the energiser' to show that there is no appreciable current flowing into the battery. With a rotored energiser, the rotor should start to slow down and eventually stop

I do not use the FEG Page 46 solid state design. Mine just uses one feedback resistor as shown in the attached schematic. A big cap across the input supply rails is very important if a PSU is used because the charger will draw high current pulses from the supply. I have built the FEG Page 46 energiser and it works OK for small batteries.

I have also built wheel energisers but prefer solid state for charging. The wheel energiser is a good learning device but is only useful for serious use if scaled up and this is an expensive project with a need to house the energiser externally from the house because of noise and vibration. IMO if you want a good fast charge rate with quiet operation then go solid state. Small bike wheel type energisers are excellent for re-conditioning batteries, especially old ones that are sulfated.

A Bedini battery conditioning / charging setup for use as an off the grid solution will need an external environmental source of energy to run it such as solar / wind generators. IMO no amount of battery swapping will give a system that can self-sustain itself let alone provide 'free' power. At best the system will extend the life of the batteries having conditioned them. There's no free lunch here but there certainly is a lot of hype surrounding Bedini technology.

IMO John Bedini has given us an excellent introduction to his technology and this allows us to learn how to use it to our advantage. He has not given us the blueprint for a system that can be 'knocked-up' in the shed or backyard that will self run and take us OTG.

The schematic is a 'front-end' extract of my full schematic and shows the drive battery. The 'X' marks are the position for a normally closed thermal switch which disconnects my trigger circuit in the case of an open circuit output.

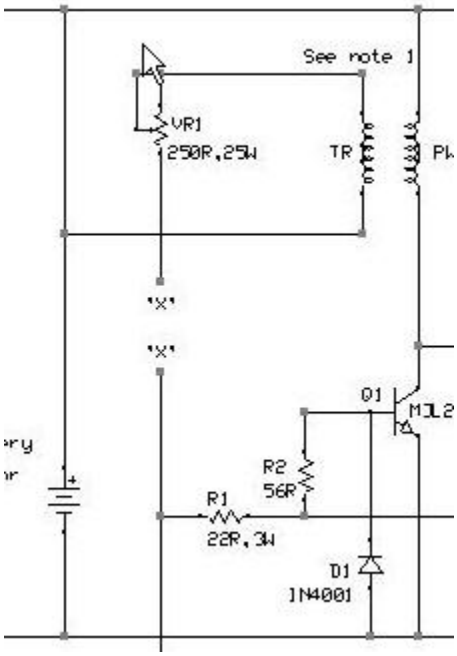

Solid state links

http://radiant.100free.com/zpe_bedini_solid.html

Battery conditioning and load tests

For the beginner and those who have never studied the SSG yahoo energy groups, an essential background on this battery charging process is needed prior to starting. In order for the charged batteries to operate at their highest capacity, you will need to take the battery(S) through a charge and discharge cycle process. After this has been done a higher efficiency will show up in the batteries. It can be quoted from John Bedini himself, that after 40 years of research so far he has only been able to recover, utilize and capture this high voltage spike or radiant energy" through batteries".

This process is regarded as "conditioning" the batteries and will result from applying a certain number of these charge and discharge cycles. Most first timers who build these units and expect instant "Free energy" and it does not work that way. The "efficiency" shows up in the conditioned. That is why the Jim Watson machine flywheel machine did not work after they took the batteries away.

JB recommends we not discharge the batteries any lower than 12.4 volts because he wants us to operate within a specific segment of the charge/discharge curve of the battery. This can take up to 20 or more charge and discharge cycles. John recommends a C20 discharge rate. You have to be careful and discharge the battery within its ratting or you will ruin it. This is very time consuming since these small energizers

can take 20 hours to bring a lawn mower sized battery to full charge (14v or so). After a repeated charge and discharge cycle they will charge faster and faster. **Minimum is 20 cycles charged by the machine and discharged at the C20 charge rate**.

You have to determine it based on the Ah rating of the battery and the voltage of the battery stack used. First determine the discharge rate that is the C20 rate of the battery by taking the Ah and divide it by 20, so for a 12volt 7Ah gel cell divided by 20 hours you should be able to draw a current of about 350mA .

Panaceas replication used the following: Three 12 volt 1.3 ampere hour batteries. Note if using the same procedure, 1.3Ah batteries will give you about a 30-50mA C20 rate. Maybe light 1-2 12volt 20mA LED's. You need a load that doesn't draw more than 65ma continuous from the battery. Your 1.3Ah battery is 1300ma total – divide that by 20 to get the 65ma maximum the battery can safely deliver for a 20 hour period As long as you don't exceed this rate by much you should be ok. Any LED should work You might have to fiddle with putting a resistor in series with the LED to get the amp draw down where you need it to be but really, any LED should get you there – as 65ma isn't very much. A grain-of-wheat bulb would work nicely as well.

Another example of the C20 charge rate: if using a 12 amp hr battery that is charged with the solid state charger/SSG/Fan kit and then is discharged at c20, it should be at, 600 milliamps.

Also some recommend letting the charged batteries rest overnight to allow for more accurate data for use on the battery performance curves. It is advised that you do not worry about the front end battery yet as initially due to the new batteries not being conditioned, you may need to use a power supply.

As for how to connect them on the output it depends on the voltages of the batteries and their state. If they are all in about the same condition and are fairly new then you can put them all in parallel in common behind the compression diode. If some batteries are older or if some have a big skew in voltages between them then it's better to use multiple compression diodes to isolate each battery getting that compressed impulse.

You should be able to charge more than one battery from the start. If you see a slow charge rate remove one at a time and see how the charge rate changes. However you can put the batteries in any configuration you find works best as the spikes can be anywhere from 20 volts to 200 – 300 volts and higher depending upon the setup. (To determine this for your fan setup, you can replace the charge battery with a light and scope the spike across it.). This has to do with impedance matching. Some setups will charge batteries in series better than in parallel and vice versa. **It is recommended to charge them in parallel.**

If you're applying a scope to the collector or emitter you should see the amplitude of the spike. You can then gauge if its large enough to let you put the charge batteries in series. It's better to put the front end at the higher voltage and charge lower voltage on the back end, so 24volts input charging a parallel stack of 12volt batteries is good. Note-if you want to charge several batteries in parallel, use separate, similar resistors for each, so you can monitor the current to each by measuring the voltage drop across its resistor and applying Ohm's law. This will reduce the current hogging of a weak battery.

Battery conditioning and load tests links

Bedini Monopole Group Experiment.

Battery Guide

Replication links

Starters SG guide BY RICK F, RICHARD L., and RS

Blue Mountains Energy Research Centre step by step replication guide for the SSG

How To Build a Bedini motor-You Tube

John Bedini – Report on 4 Battery Switch

http://modvid.com/bedini/

John uses precision equipment to measure his charge efficiencies of his batteries of which he has out lined here:
http://peswiki.com/index.php/OS:Bedini_SG:Instrumentation

R and D circuits

Fusionchip's Bedini Feedback to Source

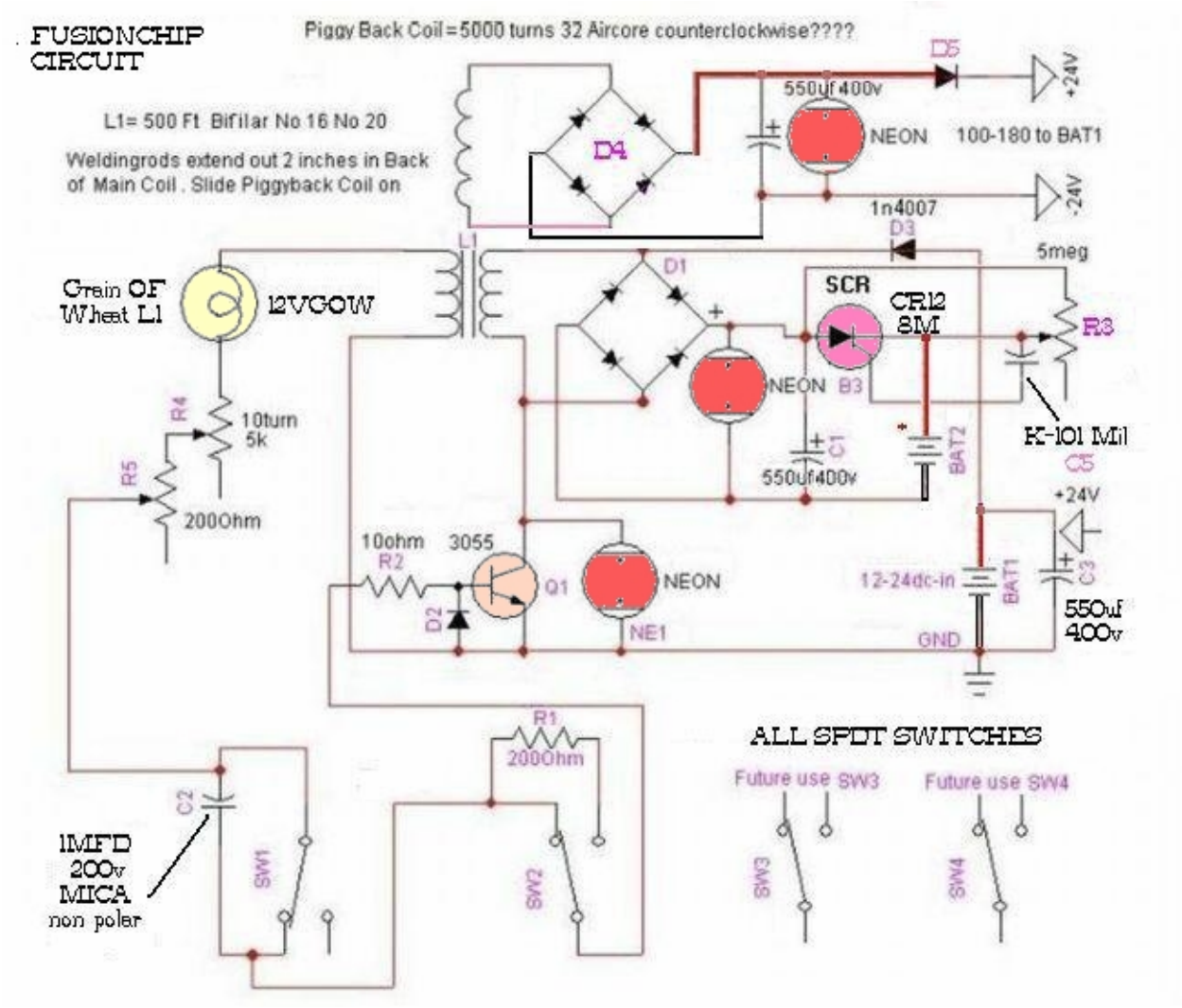

Amendment 2:

1. Welding Rods - Type ?

(Undetermined - local surplus scrap yard - number of rods and there exact length TBD)

2. Length of Welding Rods ?

(Length TBD with 2" sticking out past length of 1/4 inch schedule20 pipe)

3. PVC pipe for primary coil- ID/OD?

(1/4 inch schedule20 pipe)

4. Length of PVC pipe ?

(2" less than the length of welding rods)

5. Primary Coil Wires - 2 wires as per circuit, CW or CCW?

(Wound counterclockwise starting from the back of the coil)

6. Primary Coil End caps - What type of plastic and size?

(Teflon cutting board cut to 2 inch circles)

7. High Voltage Diode going to Primary from capacitor - Type & Values?

(RCA SK3606)

8. Primary Coil Winding - correct wire size?

(500 feet is correct the size is correct in schematic 16/20)

9. Secondary Coil Winding (Piggy back coil) - ID/OD X Height?

(5000 ft number 32 clockwise)

10. Weight of Primary coil?

11. Weight of Secondary coil (Piggy back coil)?

12. Base of Primary coil, materials used?

(Bakelite)

13. Shield?

(Shield made of steel and ferrite)

14. Size and Strength of Neo magnets used on HDD motor and Platter plates?

(Ebay Cylinder 1x1/4 n48)

15. Neo magnets facing N or S at the coil core?

(North)

Here are his videos:

http://www.youtube.com/watch?v=LczzeeyfFoA
http://www.youtube.com/watch?v=JRnYQvYEwkM

There is some information that is lacking and replicating his setup will take some information gathering but here is his latest circuit and component values.

http://www.overunity.com/index.php?topic=6519.0;topicseen

Joule Thief---Bedini SSG

This is Jonnydarvo's idea of running a Bedini SSG with a Joule Thief. The JT circuit produces light and the sends energy to the SSG that spins a rotor and also charges a battery.

http://www.youtube.com/watch?v=Tb2-ka6T3Zk

http://www.overunity.com/index.php?topic=6688.0

Mechanical power out of the SSG by jetis

Original comments –I made a discovery today, which amazed me at how much potential has the SSG to put out mechanical energy which has not been discussed elsewhere. Here I am amazed to share this secret with my friends here, to see it replicated to the utmost degree. I actually have used the magnetic wind around the wheel to produce this effect. Well I searched the internet for magnetic gears and I found this patent: Magnetic transmission – Patent 7105968. Now I think that these devices can become over-unity in certain circumstances or are over-unity.

Here is what I have done:I had built a small SSG before, which was left unused so I used its rotor and coupled it to my larger SSG's rotor magnetically. Now what I did, I didn't use any torque measuring device, but the test I did by hand was enough in my opinion to show me that something extra is being produced in the secondary magnetically coupled rotor. I could very easily stop my larger rotor with hand, VERY EASILY. But The smaller rotor, which has more RPMs too, COULD NOT BE STOPPED AT ALL! I tried holding the shaft of it as hard as I could but no stopping, but warming up of my hand, then I tried stopping it by pressing my hand on the rotor, but no stopping, and my hand almost burnt. At last I got to hold the magnets, and my magnets flew off. What can one conclude by this? I concluded that I am getting much higher torque on my smaller rotor.

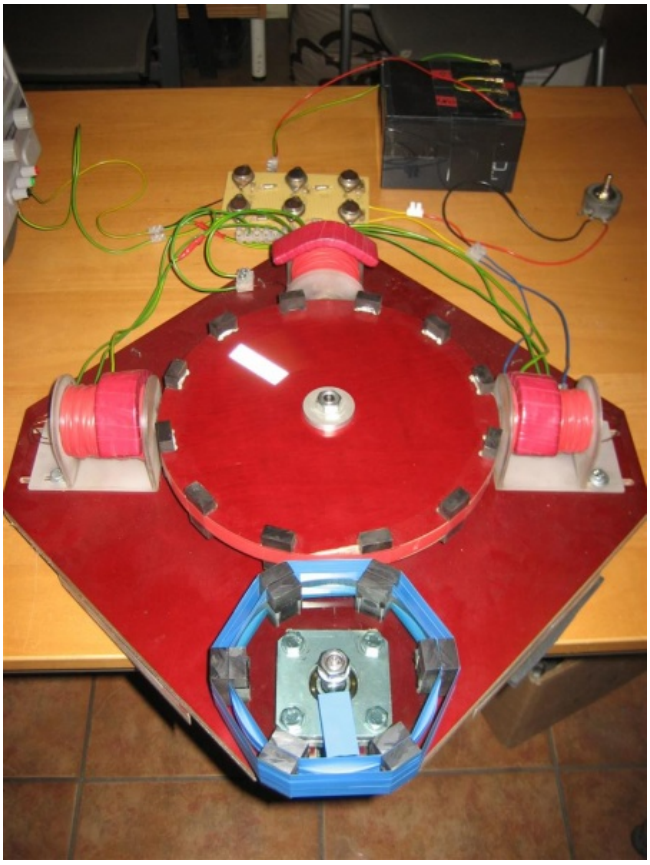

I don’t know why this happens, but I am only reporting what happened in my experiment, for others to experiment too. I don’t know if normal magnetic gears can do this or not. Maybe it is related to the MASS of the rotor or the speed of it or the size of it, who knows. I am eager to hear results from other people too. I will keep posting as I find more results.

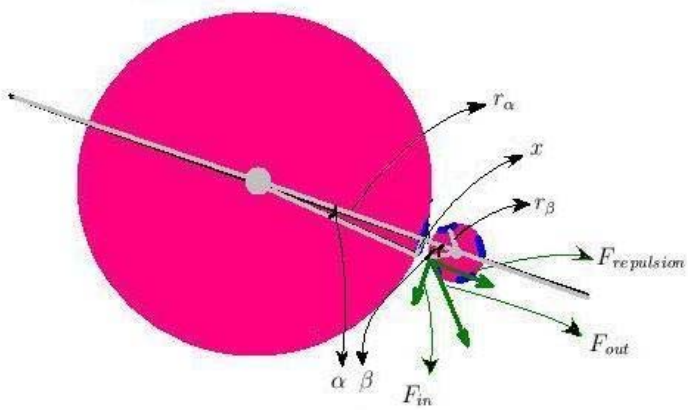

By calculation we can obtain F_{out} by using the following two equations:

$$F_{out}(x) = F_{in}.\cos(\beta - \alpha) + F_{repulsion}.\sin(\beta - \alpha)$$

$$F_{out}(x) = [\sqrt{1-(\frac{x}{r_\beta})^2}.\sqrt{1-(\frac{x}{r_\alpha})^2}+\frac{x^2}{r_\alpha.r_\beta}].F_{in}+[\frac{x}{r_\beta}.\sqrt{1-(\frac{x}{r_\alpha})^2}-\frac{x}{r_\alpha}.\sqrt{1-(\frac{x}{r_\beta})^2}].F_{repulsion}$$

The latter equation enables us to integrate F_{out} over x to get a better estimation of the output force applied to the small rotor. To achieve a higher output force the following relation must hold, thus we have:

$$F_{out} > F_{in} \rightarrow F_{in}.\cos(\beta - \alpha) + F_{repulsion}.\sin(\beta - \alpha) > F_{in}$$

$$\rightarrow F_{repulsion} > F_{in}.\frac{1 - cos(\beta - \alpha)}{\sin(\beta - \alpha)}$$

This relation shows us that the repulsive force must have a bare minimum for achieving over-unity results. If our magnets are too weak then we'll maybe get even less output, but as our magnets have a more powerful force than our SSG, It seems that we can achieve more output power, very easily, by using good ceramic magnets and coupling them with a small rotor. $\beta - \alpha$ is zero at equal rotor sizes and we'll get infinity on the right side of the equation meaning that their is no way to make the relation hold, and no excess force of the repulsion can be utilized, but as the second rotor decreases in size $\beta - \alpha$ increases and causes the relation to hold more easily. Of course as $\beta - \alpha$ increases, $F_{repulsion}$ may decrease a little bit, so somewhere in the middle is the best configuration. Just making sure the second rotor doesn't "seem" too small, is enough in my opinion.

At first I used single stacked magnets on both – bigger and smaller rotors. The spacing between both wheels was about 4mm. It was hard to get both wheels to couple, because if the SSG speed increased too fast, they would decouple ans the smaller wheel would stop. I found that this is because the space between magnets on each wheel is too big, just like in gears where there is a big space between teeth. So I double stacked the magnets on the smaller wheel (did not have enough of them to double stack also the bigger wheel), making the overall magnet strength bigger thus achieving better coupling. Just like in gears, if you reduce the space between loose teeth, you get less backlash and smoother movement. In this case we just made the gear teeth longer. But there is still some backlash as you can see in my video. As I rotate the smaller wheel, I can rotate it for a few degrees before the bigger rotor starts to move. When I attached the smaller rotor to the setup, I found that there is a lot more drag on the

bigger wheel thus more force is needed to spin it. Also less RPM's are achieved. The smaller rotor acts like a load. The bigger wheel is still easy to stop by hand. I noticed that when I gently load the smaller wheel, it slows down and so does the bigger wheel. This makes me believe that we are just dealing with a magnetic flywheel effect. Also the smaller rotor was easy to stop with my finger, felt just as easy as stopping the bigger rotor. Could it be that the torque you felt was just the matter of the diameter difference of both wheels? I mean it is far easier to stop my bigger wheel if I press on its outer side and harder if I press my finger on the area near the center. But the torque is the same, it just feels harder. Maybe I am doing something wrong, but this far I consider this only as a magnetic flywheel.

Here is the video: Some SSG tests

Jetijs- You Tube channel

Twin Rotor Bedini DC Motor by jonnydavro

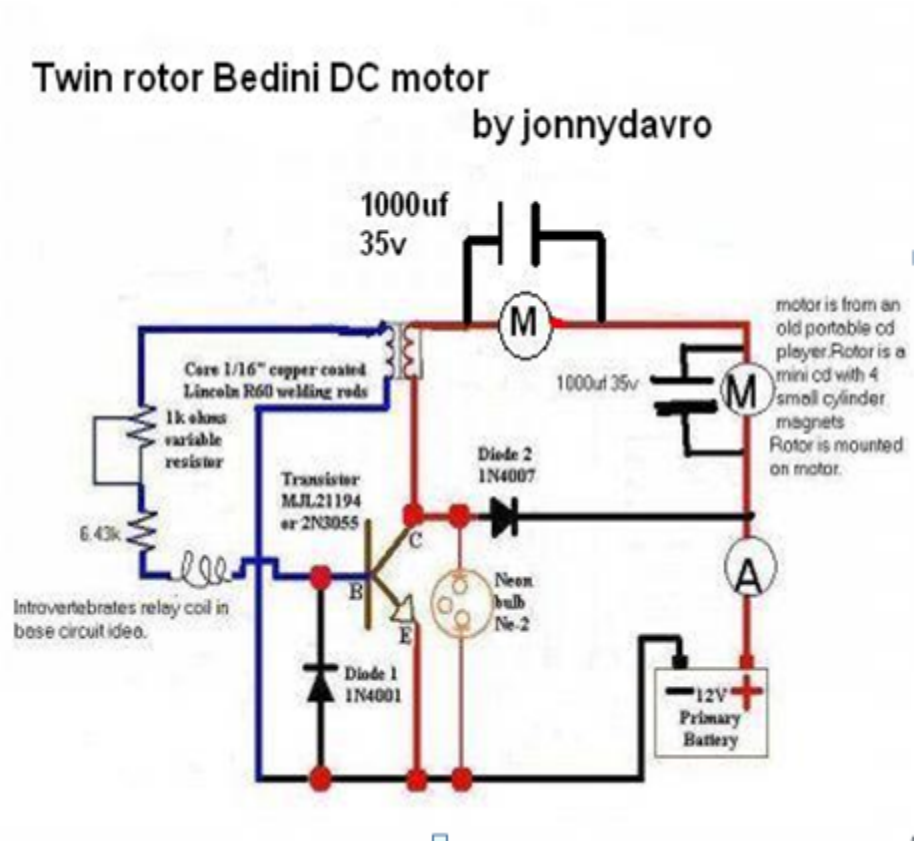

1 rotor spinning drawing 18mA
2 rotors spinning drawing 18mA

I am getting 100% more mechanical output with the 2 rotors. I don't have a tacho but the wind down time is the same for two rotors as it is for 1.

YouTube – Twin Rotor Bedini DC Motor

http://au.youtube.com/watch?v=RCljlMDsGVs

4- pole SG system

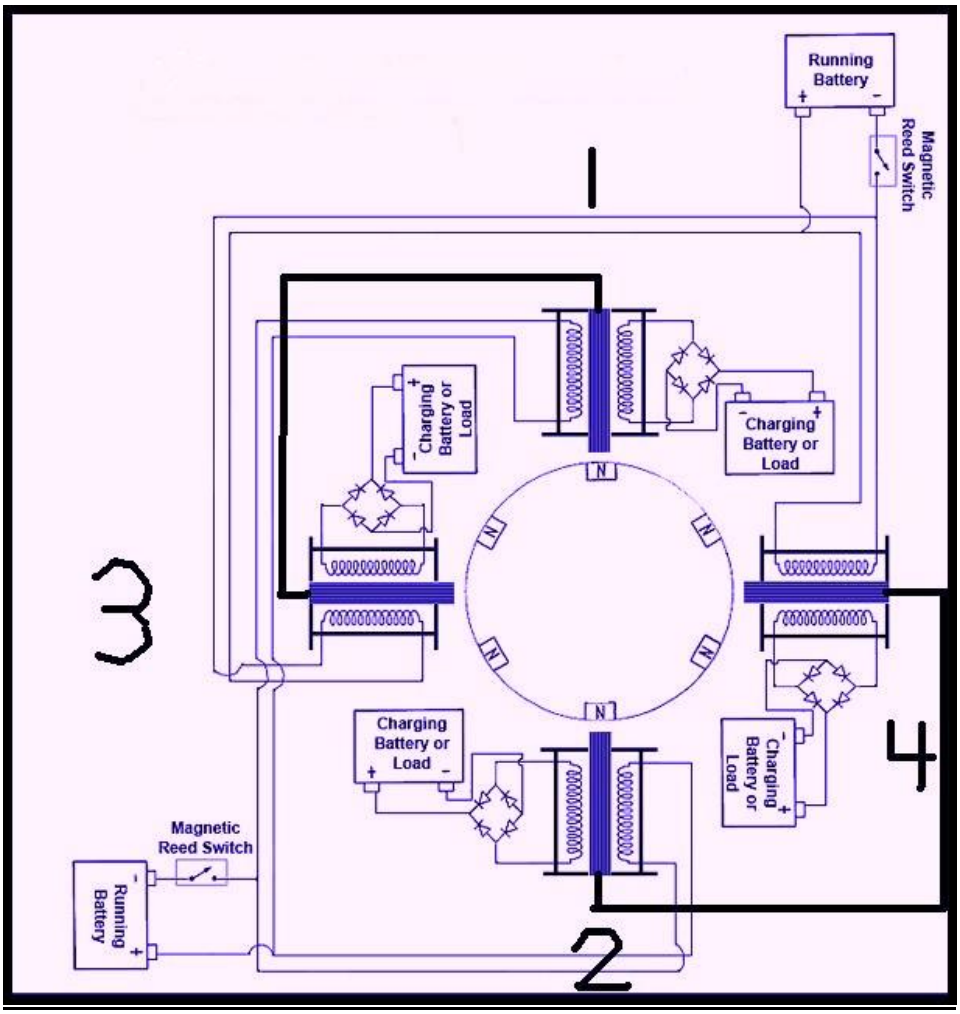

Technical discussion

Energetic forum

Bedini DC Motor Hybrid

Advanced-superpole-configuration

Bedini-dc-hybrid-motor

Bedini-motor-high-torque

R and D links

Bedini self charging motor circuit

Twin Rotor SG

Ron Cole switch

A Working Radiant Free Energy System By Ossie Callanan

R and D circuit links

http://www.overunity.com/index.php/topic,1988.490/topicseen.html

http://www.overunity.com/index.php?topic=1988.500

Bedini Newman

Faculty Information

In his patent of June 17, 1986, Edwin Gray called his electro radiant tube "An electrical conversion element". This whole conversion process goes right back to Nikola Tesla and his radiant electricity research in 1890 after pinpointing the cause of death concerning men closing the switch while applying a high voltage DC generator (in those days) to wire lines in large regional power systems, where voltages were excessive, which caused a ***sharp gradient*** *and resulting shock wave with explosive and lethal effects thereof. Tesla found the same effect in his explosive capacitor discharges that sounded like gun-shots of more extra great power than electrical sparks. Although the two applications are completely different, they both generate the very same effects. Tesla found the electrostatic concentration to be amplified to a much greater pressure as a result than any voltage which the dynamo could ever produce. He discovered the effect was related to time, a single unidirectional impulse time. The continuous high voltage dynamo pressure to the circuit charge-rapid-discharge obtained the desired rare shocking field effect. He discovered that these radiant forces traveled like light-like and uncommonly strong rays. During Tesla's shocking-wave-tests radiant power came more and more apparent; this is* ***radiant electricity,*** *which could be called a gaseous manifestation of electrostatic force, he says.*-Source

Before we start, Both John Bedini and Tom Bearden reference the use of the output from an SG as unity. Also the difference between efficiency and COP must be explained. Efficiency is the total output divided by the total input, never=100%. COP is only the users input divided by the total output. Therefore, with this device, we only paid to create the initial magnetic field (motoring effect), not the collapsing field (like spring recoil), we can use the energy introduced by the collapsing field, which both eliminates the Back-EMF and gives us usable energy. The Bedini unconventional signal in relation

to charging the battery is the key to understanding the system. **The learning process starts when one refrains from assuming a conventional energy electron current transfer from the primary source (drive battery) is responsible for charging the battery.**

By conventionally understood charging methods, only an insignificant amount of charging could take place by this arrangement in the Bedini schematic (circuit diagram). Therefore one must let go of previous theories, avoid urges to change the system to charge in an accustomed manner, and examine the phenomenon as it actually appears. The first purpose is to observe a different kind of charging, fundamentally opposite from conventional systems. Only after we notice two different kinds of energies involved in the process can we carefully distinguish and manipulate them for practical advantages in powering various loads. The second purpose is to investigate some of the advantages in this charging method over conventional methods.

'Radiant' energy = negative energy. At the time of Tesla (1888- 1943) there was no nomenclature to describe what was being captured in the circuits. It is not 'back EMF' that is being recycled, but the capture of a new energy source discovered by Nikola Tesla. This 'radiant' energy was recently back-engineered by John C. Bedini and he demonstrated it, successfully in many demonstrations of his own, and through a series of successive reproductions and demonstrations, fulfilling the last phase of the 'scientific' method.

A note on Radiant energy From Dr Peter Lindermann

When radiant energy is properly applied to a battery electrolyte, the battery undergoes a series of changes that restores its potential AND lowers its internal impedance. This restores the battery to the condition generally referred to as "charged." What is so astonishing is that it does this without the need to force the electrons from the positive plate back to the negative plate through an external circuit. Using John's simple, patented inductively coupled radiant oscillators, and his patented switching techniques, the amount of electricity it takes to produce the radiant energy is very low, and the effect of the radiant energy on the receiving battery is very high. The source battery and the secondary battery being charged are NEVER directly connected to each other. There is no "closed loop!"

John and I have run tests with prototype, solid-state, radiant chargers that draw ONE WATT (12 volts @ 80ma) from the source battery and can charge a 7 amp-hour gel-cell battery from 10.5 volts (fully discharged) up to 14 volts in under one hour (3600 joules). This newly charged battery is then discharged by being connected to a sine-wave inverter and running a 100 watt light bulb for 40 minutes (240,000 joules). After discharge, it can be charged back to full again by the one watt charger in about an hour. The COP of the system is very high. The apparent efficiency of this test is COP>60!

Even John and I question the math when it is this high. Never the less, we have run dozens of these tests with the COP>20. Different batteries behave differently with different charger configurations.

A great many variables contribute to the "charging efficiency" of the various battery chemistries. The greatest LOSS mechanisms in the lead based battery during the recharge process are 1) HEAT production, and 2) Hydrogen production. This is true for both gel electrolyte and flooded cell designs. Both of these losses are greatly reduced when the battery is charged with "radiant energy".

But beyond this, other benefits to the battery routinely accrue. The most noticeable is the re-absorption of sulfate crystals and the extremely fine replating of the active material on the positive plate. After a number of discharge/charge cycles, the plates in the battery revert to a "like new" condition and the total surface area on the positive plate actually increases. This produces extended run-times during subsequent discharge cycles.

We were TRYING to charge batteries with zero electron current! But it doesn't work. At first, it LOOKS LIKE the batteries are charging, but something happens to the battery over time that disrupts its function. The "optimum ratio" of Radiant and electron flow is not known, since we can't quantify the Radiant fraction. So what is the purpose of the magnets in an SSG? Good question!

John has always resisted the idea that the SSG is an electric motor. He has routinely referred to it as an "energizer". When I worked for John's company, we also referred to it as a "self-rotating MAGNETO". As you have already reported, the magnet GENERATES a small Sine-Wave in the trigger winding. The front half of this wave is blocked by the E-to-B diode, and the trailing half of this wave turns the transistor ON to push the magnet out. When the field of the power winding reaches its "maximum", the induced current in the trigger winding falls to ZERO again, so the transistor SHUTS OFF. This process produces a "relaxation oscillator" triggered by the magnet MOVING passed the coil.

You have to understand the historical development of these systems. John started by wanting to build a motor/generator that ran itself. This goes back to the little booklet he published in 1984 where he shows an electric motor turning a variable reluctance generator. Ultimately, he learned how to integrate all of the functions into one machine.

Yes, it is true that it is "easier" to make a pure electric oscillator, but that is because JOHN showed you how AND why!!!!! But also, the mechanical energy produced by the SSG is FREE and does not reduce the efficiency of the electrical energy recovery AT ALL. It took years of careful study and observation to firmly establish these facts.

Radiant Energy CAN be liberated in circuits that do not have magnets or "spark gaps". The primary trick is "abrupt switching" in a low impedance DC circuit OR high frequency switching in an AC circuit. Tesla describes both as part of his "Method of Conversion" disclosed in 1893.

To understand all of this in its original context, you may want to purchase my DVD Tesla's Radiant Energy from my website. It's a 90 minute lecture and PowerPoint presentation primarily consisting of Tesla quotes from his patents and articles and commentary by me. This DVD clarifies Tesla's model of electricity and clearly defines what Radiant Energy is, and where his Radiant Energy Patents fit into his other discoveries. Source

The Purpose of the SG by John Bedini

The SG is a simple project; It was designed to give a basic understanding in unidirectional pulses and how they can be used to charge a storage battery. But the Scalar functions of this circuit may not be understood by everybody. I have pointed out time and time again the reason for not closing the loops in the system. My theory goes way beyond the internet groups.

The machine is a model, how you can affect space around that coil. All engineers think that a coil is nothing more than an electromagnet with a north and South Pole, how very untrue. People think that the energy comes from the rate of change (di/dt). But how does the energy couple in the windings and where does it come from within the magnetic field.

Most do not understand what a coil can be made to do if pumped with sharp gradients. For one thing the coil becomes a quadrupole field, (Gravity Wave Converter at 90 degrees). The reason for no closed loop around the coil. Then we must combine the true magnetic field with the north pole's around the wheel. However when using all north poles we have setup a set of Scalars around that wheel also, indicated by Q1, Q2, Q3, Q4, Q5 Q6 as shown in my drawings always. These Scalars are just vectors but not uniform in level The difference between these scalars Q1, Q2,Q3,Q4,Q5,Q6. Sets up a bias voltage in the machine that subtracts from the generated output.

The reason you see very little current on the output of the machine. The effect is that these Scalar Vectors > move in one direction to the battery. The lattice arrangement in the battery allows the Vectors to couple and form real EM current in that battery. As long as the Scalar component does not couple in the machine to form power Lenz's law does not apply, since we are not perfect in what we do a little leakage is possible in drag on the machine. The trigger can pump the Bloch wall, by doing this we build an energy pump. Space around the coil or the vacuum (Empty nothing) is like an electrical gas but the Scalars never couple in it, so you say we can't find anything. By taking the

the Bloch wall where the two domains come together and pumping that we open a window for Zero Point energy, very small in this machine but workable for this group.

The energy always enters through this wall at right angles, the energy then couples in the windings of that coil. Producing what everybody terms as Back EMF, how wrong as Back EMF is never more then the source voltage under any condition. However the energy that does couple is at the exact level of potential of the electrical gas that surrounds you. Change the impedance of the coil you change the coupling effect. Now you have my answers, this is as far as I will go. Go sit and ponder it, you won't find it in a textbook. The next step would be to take a quantum mechanics class. I had to make this machine simple so anybody could build it.

As I said you already have a free energy machine in front of you, that little magnet, once charged it's forever unless you kill it cause a variance in the blotch wall and you have all the energy you want without movement. But you want to continue to move magnets across coils the hard way to get energy, be my guest. –John B

SSG is not over unity by john

To all in question, this is why I will not supply Stefan any charts, waveforms, etc... It is simply not true, as I have been posting this information for years on my Internet site. All one must do is LOOK. If I read the answers from Stefan carefully, it looks like he is unwilling to devote his attention to anything I have said to him. I have answered his questions with complete honesty at every turn. I told Stefan that we use a very special meter to determine the charge in the secondary battery. That meter is called a BK Precision Battery Capacity Analyzer, Model 600. What is so hard to understand about this and what more proof do you need that the battery is REALLY CHARGED, knowing the meter reads the battery's capacity in amp-hours? The second thing here is this. The circuit is right in front of your eyes. This circuit does unexpected things. You can only discover these things by building one and testing it on your own lab bench. No amount of "thinking about it" will penetrate the mysteries. Coming to criticize me over Stefan's problem is not the answer here, because it goes much deeper then this. Stefan has a vast lack of knowledge in this field, and apparently, so do you. The ONLY way for you to remedy this, is to build the device and study what it does.This is what I have done for 35 years!

I have stated plainly that I want nothing to do with Newman or his theory or his test results, and the machine is not over unity in any way. How many times must I say this?

I will say this in plain English again for you both. Go through My pages. You will see pictures of the wave-forms. You will see every machine I have ever experimented with, including the "bucking field" generator. You will see everything I talk about. I do not just sit here and draw diagrams that do not work. I test everything. I do original work, and patent it. When I "duplicate" someone else's device, I report it and give credit to the

inventor, like my "Adams" replication. I don't obscure other people's work, like Stefan's goofy "Easy Meg", which has no technical similarities to the monumental work of Tom Bearden.

I did not give Sterling bogus information when he arrived here to see if my devices were real. I sat right here and let his engineer watch batteries charging, hooked up to the scope so he could see the wave-forms. I sat right here and showed him how the circuits work. I sat right here and explained everything I could within reason. But this company has millions of dollars worth of stockholders. Sterling and his group signed "Non-Disclosure Agreements" before the demonstrations. I gave Sterling permission to start his public replication project for the "School Girl Motor." The idea that I have some nebulous obligation to disclose everything about this technology on the Internet is pure fantasy. When I DO give you "step one" on the path to this discovery, you refuse to take it. This proves you are not even ready to take "step two", much less a complete disclosure. The fact is, you wouldn't understand what I am doing now, anyway. So why disclose it?

I have posted the Kron work on my pages, along with the wave-form pictures. You obviously don't know what it all means.

These systems do NOT capture "back EMF". Back EMF is not capturable. My patents say that my motor captures Back EMF because THAT is the only claim the Patent Office would accept. In reality, Back EMF is a term in electrical science that refers to the effect that reduces the current draw in a traction motor as the motor speeds up and generates a counter voltage that opposes the applied current. THAT is "back EMF." My systems do NOT use this process.

Koen, you are correct when you say that I am quoting Tesla correctly. But it goes much deeper than that. I actually understand what Tesla was saying and my systems tap the same Radiant Energy that Tesla discovered. Stefan is clueless as to how this works, and has never listened to my suggestions about how this works.

There is NO free electricity produced in these systems, or any other system that I know of. I have stated this repeatedly. The only thing these systems produce are a series of "high voltage spikes" that have no current associated with them. Voltage without current is the nature of Radiant Energy. This is what Tesla said. I call this "reactive power" because it does not represent voltage and current simultaneously, that could be measured as WATTS. This Radiant Reactive power WILL charge batteries, light light-bulbs and other things but it DOES NOT meter as REAL POWER. This is why your math is useless! So please, quit quoting your theories and analyses to me. My light-bulbs are on. Are yours? You are welcome to believe in your theory, but I KNOW that Tesla was right about the nature of electricity, and how to successfully tap its useful fractions. If you would just build the motor the way I have said, you could begin to learn about this too.

Beyond this, I am done CHATTING with you. Leave the people alone who are trying to learn this. Your ignorant comments are of no use. That's as nice as I can be about it.
John Bedini

A collection of posts by John Bedini to the public forum

1)The best way to do this is to have a magneto run itself, pick off the spikes that are longitudinal , This is the same as a Tesla coil system, but low voltage so you can use it. If you think it can not be powerful increase the potential on the input to 36 volts, God help you if their is no load to the charging side, your devices will just fry, they are not built to handle reactive radiant power pulses. The Idea is to not use very much current in the primary system, pick off and supply the longitudinal wave, Radiant spike to the secondary battery forcing it to recharge itself. Chemical reactions take time in nature.

2)The picture of the monopole motor on the start page is in the patent Tom Bearden and I filed. This is one drawing from the inverted circuits. This motor that was used on the TUV test. The circuit is

correct, an SCR discharges the capacitor into the secondary battery. I'm trying to clean it up, will post it when I'm done.

3)What drives the wheel,

The magnets around the wheel are only used for a trigger signal. What is driving the wheel is hidden from your view, what is hidden from your view is also the charging signal. The driving force of the wheel is scalar or magnetic south poles between the north poles. Make yourself a timing light by taking a green or red led with a 330 ohm resistor in series with it. Place skinny white strips down the center of the magnets around the wheel, connect the led across the coil and then tell me where the coil pulse is and what is driving the wheel.

The force that is driving the wheel is the same force charging the battery. Do the test take one fully charged battery and one discharged battery, hook them up and see if you get one to one if you

do you have just seen a unity machine, but please do not leave out the wheel rotation in you calculation, mechanical power is equal to work done, its a figure of 29% so what kind of machine have you built?

You will find that the scalar south is driving the wheel and not the north pole.

4)If you did write this, let me just direct your attention to your own data. Your meters are CLEARLY SHOWING that "electrically" the output of the system is only 36% of the input, but, the output battery is charging at almost the same rate as the input battery is dropping.

This indicates that the "radiant infusion" is making up for the difference. Right now, even if you are not quite at break even, your system is running at a COP of about 2.6 (1/.36 = 2.77) And this is

before you have even optimized the circuit. So, the COP of the system IS the Radiant Gain! All of your "electrical losses" are almost already compensated for, but the Radiant Gain DOES NOT show up

on the "electrical meters"! But it does show up IN THE BATTERIES! Further fine tuning of the circuit can raise the COP even more.

5)These systems do NOT capture "back EMF". Back EMF is not capturable. My patents say that my motor captures Back EMF because THAT is the only claim the Patent Office would accept. In reality, Back EMF is a term in electrical science that refers to the effect that reduces the current draw in a traction motor as the motor speeds up and generates a counter voltage that opposes the applied current. THAT is "back EMF." My systems do NOT use this process.

8)When using the output from the energizer you cannot use an inductor in line with the batteries, diodes OK. The diodes just isolates the batteries, the branch currents are the sum of the total, the more the branches the better the power transfer. This also means that the output cannot be hooked to a transformer of any kind, you will blow the circuits up with the 2N3055 transistor. I'm trying to make this very simple as Sterling suggests in his post. Just make the circuit the way it is drawn, start out slow before changing anything. The energizer needs the impedance of the battery too work right.

9)Battery testing should be done by removing the battery from the system, the battery capacity analyzer needs to be a standalone test. We have found it's not a good thing to test the batteries with the machine hooked up. Remove the battery you want to test from the branch diodes then test the battery.

10)The south pole scalar is the force that causes the motor/energizer to rotate, that force is equal to the charging radiant force, no current. Some have asked about, how do we get motor torque. If you

want torque then you give up the radiant charging. Another words if you add current to switch the north pole as a motor function you will lose the radiant charge and you can only have what the normal

reversal of the coil is, in back EMF, that is about 20%. Again if you use the motor function you will have no radiant energy for charging, please do not confuse the two functions.

11)The test you are conducting right now is the test that will prove that there is extra energy being supplied to the batteries. I for some time now have been saying that I did not understand the rotation

experiment except to condition the batteries, The rotation experiment was with a machine found in my first patent, motor generator. In the machine, in this patent the electrical circuit used a hall for the switching, the machine was charging capacitors and every two seconds the capacitor bank was discharged into the four batteries at the back of the machine. Here we have two different machines.I continued my experiments until the development of the monopole motor at which time I could see that by disconnecting the timing wheel and going back to my lab notes from 1971 the diode worked better. I must state that I use much bigger batteries then what you are using. So, I said to Sterling that if you can take one battery on the front and charge four batteries on the back what could you do with this energy, you could run and inverter to run a charger to charge that one battery, also do other work at the same time. that is how I use my system. I run everything on the C20 rate even on discharge, this is very important if you are to succeed.

If Sterling with a .6 watt motor is charging his batteries and also running the wheel where is the energy coming from? Think about this, a .6 watt motor running a big wheel with rocks in the bearings plus the wind drag and anything else that could be wrong, but it is charging it's batteries and doing work. But Sterlings motor is only a .6 watt motor, how could that be, a .6 watts could not even drive a fly up the wall let alone keep that wheel turning and charge the back batteries. As we have said all along the machine is a 4 to 1 machine, one battery in four batteries out charged. If Sterling inputs one 12 volt 4.2 amp hour battery and he charges four on the back and then connects all four together he would have 16.8 amp hour battery that he could take .84 amps for twenty hours, if this goes beyond the twenty hours, where did the extra energy come from? You can not hurt your batteries if you follow the C20 rate of discharge.

12)The system consists of 24 1600 amp hour batteries, the box you see in the picture is a control manual switching box. the machine is constructed with 1" Plexiglas because everything interferes with the energy recovery. the load panel is lighting 1000 watts of light bulbs we have a maximum of 2.4 kw we can use, the coil arrangement is something that I can not talk about, the control is one device, as I said the coils must match the battery impedance within one mill-ohm impedance. the wire is number 6 ott stranded wire. the battery impedance is 1mill ohm on the square batteries and 3 mill-ohm on the round batteries, this is because of the plate difference in the cells, The big machine runs at 770 RPM, the multi pole small machine runs at about 2,500 RPM. The big machines input current is 10

amperes, the little machine 5 amps. I go by a standard voltage on the cells and only measure one cell at a time to tell the state of charge. I do not agree with Yo Tango on what is going on, applying AC

to the batteries is not good idea and the battery does care what is on it's terminals. I can see that Yo Tango only understands the basic textbook concepts. I said that it looks like PWM, it is not, and it is not AC.

I measure the cells by differential equations I can tell you the state of charge from one moment to the next. We only use 10% of the big batteries at 1600 amp hrs. The batteries can deliver 210 amps at

24 volts continuous for 8 Hrs, running these batteries at 10 amps is way under their C20 discharge rate. The cores are welding rod as I have always used, if you use a neo magnet you saturate the core the trigger does not work right. We pull power from the primary cell while the machine is running charging the second battery bank. Marcus this is not about current charging the battery. All the battery books state you must supply electron current to the battery to charge it in a reverse mode, the battery does not need any electrons, so you can't put any more in them. If you put more electrons in the battery they just boil and each time you do it they are dieing a slow death from heat you can not force the chemical reaction, you must lower the impedance of the battery to a state where it thinks it's charged, and it is charged. The mechanical power of this system is limited to 10%.

The magnets are made by me and I cannot go into that, but I can say that it is standard material. Look on the small machine you see that 1 amp light bulb, it is in series with the trigger signal this controls the impedance to the trigger coil, works like an old tube oscillator circuit. I also have gone through all the post on the group, to determine what the confusion is, my answer later on this one.

The duty cycle of these machines is 11% on input. The idea is to not burn up much input power, the return is way over 450 volts in tension across 1 mill-ohm on the secondary batteries. The SG is just a simple energizer to get an understanding of what is taking place in the trigger and output. The next question you asked, why do I not tie the grounds together, because when you do that you have no hope of a unity system, it's known as a closed loop system, these systems run under unity and always will. Over Unity or unity systems are always open loop systems just like nature, as soon as the group learns this the light bulb will turn on. Ben has not chimed in but this is all about the impedance of the system. Marcus I got over what people think of me a long time ago. This group has been given more information on my systems then anyone on the internet could ever hope for.

I work on this system 24/7 without rest, so I should know what is going on in the system. The small scale systems need to be tuned just right to work in unity. I do not know what you are doing in your system so I reserve any comment. One last comment, The answer is all about the impedance in the cells, the lower the impedance the more power you can get from the cells, once again you cannot put any electrons back into the battery,

it already has what it needs. If you force electrons at it, it will boil away the water in the cells causing heat, heat will damage the process that takes place in the battery, each time you do this the battery will become weaker and weaker until it is useless. This is why there is a space under the cells so the damaged parts can fall off until they short out your battery.

13)Ben, this is exactly right on track to the bigger machine, I'm glad someone took my name in vain, better you then me, but I have taken my own name in vain after popping 100's of devices into clouds of smoke. Folks this is not a simple machine and everybody sees this different, For those without an engineering back ground you're in big trouble. "If the engineering is built into you", you will succeed sooner or later after you get past the mind blocks.

In a way Ben is right when it comes to a big machine, but the real question is how do I control the impedance , not an easy task as you shall find out after you spend hundreds of dollars on transistors or fets. If the group thinks for one moment that the pictures I have posted are even close to a E-Amp design or a SG think again, the energizer in the pictures is completely different including the

magnetic construction of the rotor, The normal rotor on the early machines can only develop a limited power level as can be seen by the pictures of the early machines, not so with the big rotary machine

for there is no magnetic fields like you have ever seen before on the rotor, it is based on full scalar electromagnetics of which I cannot go into on the SG group. I can say that it requires full, Quaternion math, The machine does develop and is running on scalar fields. I can also say that the coils look like a dead short to the devices. I can also say that the trigger is not recorded or discussed anywhere on any of my pages and that I have not discussed it with anybody except Peter who works 24/7 with me every day without fail and it is from the year 1971 in my lab notes, and that the only other person that ever knew of this energizer was my good friend Ron Cole, dead now. That machine cost us 30.000 dollars to build. so there is nothing free about it. I can also say that it took about a month to machine all the parts and some could only be made by hand. The devices are not in any electronic stores at hand and must be selected for the proper impedance by buying 100's of them. So yes there is a lot to building this machine. But the group is not at this level yet. I started to go into it with the drawings located on my home page, but I found out people just did not understand and that my skills in writing this was not in me at the time. But what I did do was to try

to give three different people pointers into this direction, but they could not make it run either. Peter and I did make it run after smoking it three different times, and when those batteries smoke

Something it's smoke. The term E-Amp is the early multi-pole machines; it has nothing to do with this biggest machine. Ben is leading you all down the right path in building a bigger machine, but I must admit Jack Welsh also has found something out and reported so, Jim is on his way there, to have total success. The SG energizer will if built right charge every battery you could collect from junk yards, and you could make it from junk, a 25 watt light in total darkness is pretty bright.

So this group now has people on it that can make this a success if the focus stays. The SG is a simple version to gain an understanding into this energy. Yes I will say this again one junk yard battery can charge them all. I think Ben has many hours into this field now; he builds everything and has the knowledge to do so. Jim is the next in line to have total success at this, Jack has already done it. The SG built big will show a whole different picture even if it only had one big coil. Simple rules, C20 discharge rate, big batteries, properly adjusted trigger, ferrite magnets, low impedance coil. Here you have the answers, to make it work.

Thanks Ben for the comments on the energizer, it helps. I also hope this answers some of the questions I received by e-mail tonight, as to the cost of this machine.

14)Thank you for the short tribute to Ron Cole and the short analogy of the motor that Cole and I built over 20+ years ago.

For all those that do not know Ron, I worked with Ron many nights on new types of magnetic motors that have never been posted to the internet. We both were Audio engineers with over 35+ years in the

field, My task after working in the semiconductor industry, was to design a line of amplifiers new to the market place, known as the first dual differential drive amplifiers, the amplifiers were the first to couple a qusie output to a dual drive using feed forward bias, The first of these amplifiers were built at acoustic control and were used at every rock concert in the USA. Second I was to study magnetic as a hobby in my spare time. Cole and I built many motors with the first neo magnets that GM had, Sal got to see one of these motors. Ron's motor was not stoppable, there is still one of the motors in my lab which Stan Mayer got to see run.

The Mono pole motor Energizer is one of the motors that always gave the best results recharging batteries. There are many variations of the mono pole, the mono pole is the SG you are now building. In our experiments we did discover the art to building a mono pole in how we arranged the magnetic structure for motor use, taken from my lab notes from the 70's is now the motor posted to your picture section in this group, now on Sterlings front page news. I do however disagree in the way Sterling has written this as I'm to be judged by what people with professional electronics training in this field ,speak up who are you experts. You have my full attention in this matter. It's a 24 volt system Sterling and not a 12 volt system.

15)Radiant energy is like a gas the problem is in tapping that gas, because it does not follow the standard electron theory, this is why the math does not work. The little SG at your level needs to be refined a bit on the input electrical side. I pointed to something yesterday called the SOA curve of the transistor, it's speed now need to be faster 4mhz device to start., if not cross conduction will take effect and at a higher speed and voltage level, your coil needs to be wound in such a manner as to hold the "magnetic field inward" so nothing can get out, one litz wire will do the trick or just wind it that way, a light bulb in the base circuit in series with the base resistor will adjust the impedance curve as the machine goes through its resonant points for speed each time the machine reaches a new lever the current will drop out increasing the speed of the machine, you can't do it with a 2n3055.you are at the limits of that device and anything more will just blow the device. The neon bulb now will just melt if the hook is wrong, and the device will go up in smoke.

16)You can do this one of two ways, you can try to wind this as you put this on the coil or you could just tie the wire to a tree or something, walk 150 feet away and twist it with a drill as tight as

you can. The other transistor device you are going to pick, would be good if you can get a flat pack 16 amp 4 Mhz device at 250 volts about 3.00 dollars, all resistor values are going to change after that in the base circuit. Roamer is right on the rest, we are all here to help you get the job done to this level. my advise is to use a drill and walk the wire out, trigger wire can be the same size as the power coil wire.

17)Happy to see you just did not give up, happy to see you are making a machine to test, any questions just ask.

18)The C/20 discharge rate.Motor cycle batteries, car batteries, and special purpose RV batteries are nothing more then start batteries at the worst. You must take the cold cranking amps and divide that buy 20 to get the amp hours of the battery.

Example-560 cold cranking amps/20 =28 amp hours now 28 amp hours/20 =1.4 amps for 20 hrs, but with a start battery you can only have 20% of that and the battery is considered dead. If this was a true deep cycle you could have 80% and that would be pushing it. Lead acid cells when they reach 12 volts are discharged, this is why it is so important not to use to much energy on the input of the machine so you can stay in that curve. The deep cycles in the pictures I posted do not stand at 12.50 to 12.65, they stand at 12.25 they are lead calcium with a special negative plate to reclaim the oxygen. Car batteries do not have this feature. The machine you are building will bring down the impedance of the battery this is how the charge takes place, it drops the internal impedance of the cells, no real current is needed this way.

19)Roamer is right, just take 4 or 5 of the 1Kva diodes you already have and twist them together, this will work just fine. Low DCR diodes are getting very hard to find. I just had

a box of them from the amplifier days. I can get you a number if you think you could find them surplus. I will post the number tomorrow morning anyway.

20)In the files section is one of the diodes I used on the E-Amp SG machine its a low DCR diode, 1N5626.

21)To make this long story short. The SG is a trigger for a high potential charge. I have said that there are two stress currents here. The machine is one of the stress potentials, in that it builds up the high voltage potential. The battery is the other, much lower voltage. If the high potential is applied across the battery with no real current no electrons will move. Most batteries charge backwards with electrons, you do not need to add any. We want to charge the battery the other way, we want more active material on the positive plate, this lowers the internal impedance of the battery, do this and you can have the power. The sharp spike is the trigger to the negative resistor in the battery. The SG is just a device to study what is going on in the battery. But if you sit and think about it, the boat will pass you by. Build it as it is, "do not change anything". Get it to work first, measure everything and if you cannot measure anything devise a way to do it. this is the only way to succeed at what you're doing. If you get mixed up with other things you will fail, this takes focus.....Think, think, think, when it look like it is not doing anything find out why, it just takes thinking out the problem. It could just be a wire, it could just be the coil that does not have enough turns, it could be a transistor that's bad but still works and so on.....Focus until you understand the machine.

22)When I first started publishing my work in the 1970 on different system that did show the strange effects that we all seek to use as free energy, I made it very public. After a conference at the Tesla convention in 1984 where I did get up on stage and discuss the little box I held in my hand, and Jim Watson who did give the demonstration of My machine, now his machine. There were only two differences, the machine was publicly disclosed in a little booklet. One man was bound to be told that if he ever discussed exactly how the machine worked his whole family would be killed, but gained 2.5 million, the other man was pushed agents the wall by two big brutes at gun point and told you will buy gasoline the rest of your life. I was the latter. When I went into a public company and was given stock for my many hard years work on a 3D sound systems and every studio in the world started using it, I was left out of the equation, The inventor never sells his stock it looks bad, but others got rich to never know me again, I was the latter again.

When the internet became popular I was there I freely posted all my work for people to use and discover what I did. I was laugh at and was completely ignored, I'm not a writer nor have I ever been, and do not claim to be. The one gift that was given to me was the ability to see through circuits to run them in my head, to build anything I want, so I keep doing it. I do make "My" information public, maybe I should not. Yo you have no Idea what could happen to you, because you have not been their, you have not

had things taken from you and then the name changes hands and your item is the bad one after that. You have not had people come to your shop and write detailed information and give it away without your permission, you have not had your mail opened and the check's taken out so you would starve and lose everything you worked for.

You have not been made to eat dirt yet.

I just watched a man in France take my work and change it and call it his own,and to beat it all say it publicly. But don't worry it's no longer mine since it is now his patent pending. You have said publicly that you're only here for one reason, that's to wait for Marcus to finish his work so you can improve it, and you'll be gone, never giving credit to anybody. You think you know what it is but you do not. Have you even stopped to consider that it's my work that got you here in the first place. The forum is not physics 101 with all the political ramifications of drugged words on what we all should do, you say just around the corner is the machine of your dreams but the end of the year, we'll see. Marcus did good work and it showed what he said of which I was willing to admit, but as Peter and I said the measurements are not correct, it does charge the battery faster than the radiant, but it is standard classical EM engineering meters and all. You and others can't change the history of my work, you can only take it and never talk again, flee the scene, put your name on it, say look what I did.

This is your political agenda the way I see it, for you have told everybody what you were going to do in your first posts. My dog is the same way, but the one thing the dog does is he or she loves me and stays by my side even if I'm starving, people move to the next person they can suck dry. This is called STREET 101, so you said I don't post here anymore so why do you keep coming back to put your philosophy in the group. The whole world is about to blow itself up and you are living on bowls of sunshine, love peace and happiness.

You say you don't care about money, then how do you live, and pay your bills, down deep you do care about money and fame. I got this group to the first step, the idea was to focus focus the group to

discover what the energy was, but now we are reading threads as to what the world could be, so snap your fingers and say everything is fine, I gave the group a chance to vote me out of it, no problem with me leaving, no problem calling the device a lemon, but at least I have tried to give the information just as I tried since the internet started.

23)Now we are getting somewhere, It's about time someone has seen this, The energizer runs on an absence of lenz's law, when the law applies the machine is under the control of standard EM circuits, this machine switches in and out of this law. The Law of lenz is to keep everything under control.

The gate keeper the magnetic field is there to make the law work properly, if you do not understand the control of the machine then failure is certain, The scalar fields are their even if the magnets

are spaced far apart, know you know how advanced this little machine is. The thing that was never taught is how do we control these things and laws, think about it. My drawings are correct and to advanced for most people working on this machine. This is why Bearden says the books must be rewritten, and Tesla denounced the AC system of closed magnetic fields. If you do not open your eyes you will never see anything. Engineers close the loop so they can see the power on meters, so they are not really engineers of anything, just wasting power in the system continuously. The laws must be re-examined, nature works the same way, no global warming just a decrease in the magnetic field, which is the gate keeper for the weather. Now you have all the answers to make it work. When people do not know the truth, they can feed you anything and you will believe that is what is going on. Remember Faraday only seen one thing and made it a law, just like you only have a volt meter and nothing else.

24)Heaviside discovered the huge nondiverged EM energy flow component (associated with every circuit) that does not strike the circuit, is not diverged into the circuit, but passes on off into space and is wasted. From the beginning, Poynting considered only the tiny intercepted and diverged energy flow component. Later Lorentz arbitrarily discarded the huge Heaviside "dark energy" nondiverged component since its source could not be accounted for, and its magnitude was enormously greater than the input energy considered to be provided by the operator or the power source to the circuit.

26)Kron, Gabriel. "...the missing concept of "open-paths" (the dual of "closed-paths") was discovered, in which currents could be made to flow in branches that lie between any set of two nodes. (Previously — following Maxwell — engineers tied all of their open-paths to a single datum-point, the 'ground'). That discovery of open-paths established a second rectangular transformation matrix... which created 'lamellar' currents..." "A network with the simultaneous presence of both closed and open paths was the answer to the author's years-long search." Gabriel Kron, "The Frustrating Search for a Geometrical Model of Electrodynamic Networks," Journal unk., issue unk., circa 1962, p. 111-128. The quote is from p. 114.

Lamellar currents, these are branch currents flowing along the nodes in layers, they may be tapped off to form real EM power once transformed. The only way I have found to capture these currents is

when the inductors become negative value, the same for semiconductors. They are thin currents of zero potential under measurement. Lamellar currents when transformed in branches become very powerful in charge.

29)Yes they are quad filer # 18 wire, I'm going to switch them with the Cole switching, I'm now going after the mechanical torque, This is a 12 volt machine. We will be posting as we do the torque test, these are very powerful machines for monopoles, tight gaps and double stacked magnets, I will design this machine to use three forms of switching..... and three forms of energy recovery to the secondary battery. The machine is designed to run on 100 amp hour diesel batteries. These batteries are more then enough to get you through power black out's. What the small batteries do is very different then the big batteries. The important thing to remember is the impedance of the storage batteries and the coil must be made to be as close to this impedance as possible. As i have said before that the radiant inductive spike is the only thing that you're after, this spike is longitudinal in nature, and this is what forces the battery to recharge itself, by an internal current in the battery.

You can see the machine up front, nothing hidden. Energenx does this type of work, we developed products from the work we do, so there are certain things I cannot say. I have given the correct information to get you to this level. I have posted the Kron papers so that you know what the coil is in the circuit for and the capacitor is used for, I have changed the design, using the battery to be used as the capacitor to gather the negative charge.

30)I thought I would comment on the two north poles pushed together to form a mono pole. Yes we have used this for years and have built motors using this arrangement. In Patent number 5,487,057 you find that we have used this for years in the audio clarifier, dual beam and Quadra beam. If you use this, the arrangement is awkward to mount. You are correct in what you have found and it works great . If you choose to use this in a mono pole energizer the trigger is much stronger and it requires a change in the base resistors and the iron in the coils. Look up the Patent.

31)Just about any steel wire will work for the core. I have only found a few that do not work. Check the iron with a magnet, if it retains the magnetism it won't work. The best I have found is the welding rod.

32)You do not need to paint the iron rods, just set them outside and let them rust, it works

33)This is the way i feel about all you that want to waste your time on the math for this machine. This is the best quote that explains it the best. The quote was from Lost Science by Gerry Vassilatos and believe me he knew what he was talking about. Tesla believed that radiant electricity is composed of "Aether Gas". He based this belief on the fact that his zero current coils were not conducting the"slow dense" charges usually observed in ordinary electrical circuits. Abrupt impulses produced distinctive and different effects.... fluidic effects. The qualities ascribed by Tesla to "electricity" or things

"electrical" in his numerous patents texts and press interviews are those which refer to the aether gas."

Tesla did not refer to electron currents as "electricity". He did not equate "electricity" with electron flow". Whenever Tesla spoke of "electrical" effects he always described their effusive, gaseous quality.

Aether, in Tesla's lexicon, was space flowing electricity: a gas of superlative and transcendent qualities. Aether was electricity which filled all of space, a vast reservoir of unsurpassable power, Motive, dynamic, and free for the taking. Tesla also said that there was no way the Maxwell equations could work with this technology because of its nature. -John

Capturing Radiant Energy COP>1 by HYIQ.ORG

The Series "Energy from the Vacuum" is without a doubt a brilliant collection of technical information DVD's. Radiant Energy has been around in theory for over 100 years. Nikola Tesla was one of the first to coin the term and use it wisely. The problem is not many know what it is or how it works. After many years of research and then reading the book "Secrets of Cold War Technology" I had a few things fall into place in my mind. I have been, for years, a Bedini Monopole enthusiast, building many Mono Pole motors for myself and in the last few months having some good results from my latest versions.

Moving onto the next level I decided to take on board Floyd Sweets quote :

"The summation of the losses due to resistance, impedance, friction, magnetic hysteresis and eddy currents and windage losses of rotating machinery will always reduce overall efficiency below unity for a closed system. "

Although the Bedini Mono Pole Energiser is an open system and is an excellent machine with fantastic efficiency's and easily measures COP>1 it is open to the sceptic with closed minds to say "This is Perpetual Motion and can't be done" even though the device is working right in front of their very eyes. Solid state is an beneficial for many reasons. I think you could name them all if you are reading this page. The Engineers all try to get rid of this energy in the circuits by simply using a diode to short out the Radiant Energy. You will see this in many circuits especially high voltage circuits. The Engineers say it is to protect the device that the diode is put across. You will see it in this form:

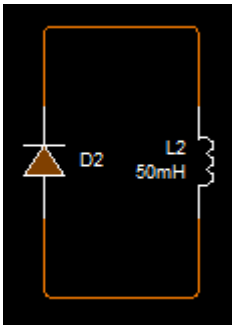

This is just an example. As you can see the diode is across the coil to stop B-EMF or C-EMF depending on terminology you prefer. So this tells me that there is a problem straight away because the power in the circuit can easily go far beyond the maximum rating of the components in the circuit depending on the circuit ratings. So where has this conversion or more accurately appetence of this energy come from? As the Great Mr John Bedini says no meter can read this Energy but the Oscilloscope can. It is dangerous but with low energy circuits the finger is the only other device that can measure this Radiant Energy in the circuit.

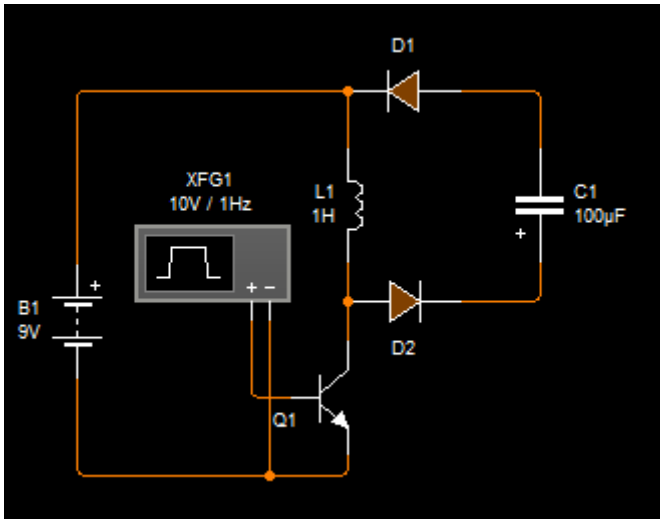

The above circuit is how this Radiant Energy is collected. This circuit will charge the capacitor slowly with each pulse of the transistor Q1. XFG1 can be substituted for a 555 timer circuit. Make sure C1 is a high voltage capacitor if you are going to leave the circuit going to long time. The bigger the Spike on the Scope the higher voltage can be reached on the Capacitor. So no moving parts, minimal voltage supplied from the source battery you can get a very large voltage out. You could replace the Capacitor with a battery like Mr Bedini does if you want and recharge another battery. Very simple.. There are lots of variables in this circuit to get the best result.

1: Use a Mosfet with as high ratings you can. 1000v 20 Amps or even more if you can get them. This Mosfet must have a fast rise time, the faster the better, Like Mr Bearden

said Sharp Gradients. You wont ever need this rating in these circuits but it seems the rating is better if it is higher. The most I have used is 12 v at 1 amp. This is higher than it needs to be though.

2: Use a coil with as high resistance as possible. I am getting a very good result with a resistance from 0.45 gauge wire at 68 Ohms. Wind the coil as tight and neat as possible. My circuit only draws 66ma 12v input. You want to draw as little Power as possible and still get as high as possible output. I can see on the scope up to 700 Volts. The spike will fluctuate a bit.

3: IMPORTANT. This circuit MUST NOT have any path to ground directly. You will get no output if you do. Radiant Energy will run to ground if it gets a chance and go nowhere else in your circuit.

If you follow these three steps this will give you a good result. I am not guaranteeing you get a good result first time but with a bit of persistence you will get a good result and see some good charging very quickly if you play around with it. Frequency is something that helps with output. I have found a good Frequency range at about 50Hz – 200Hz. Higher Frequency sometimes is not better. I am no Expert in this field and am still learning every day I only want to share what I have found, by purely Experimenting with, and researching the technologies that are freely available on the net and in Library's.

Disclaimer: This circuit can be very dangerous. Please take care touching the circuit while in operation. Potentially LETHAL VOLTAGE. HYIQ.ORG takes no responsibility for harm to ones self or damage to ones equipment. This information is given free to the public of the world and is not for COMMERCIAL USE. This information is not be sold or bought. Source

Spin Connection Resonance in the Bedini Machine by Dr. Myron Evans

Dr. Myron Evans (often acknowledged for his work in unified field theory) and his team have nearlycompleted the first draft of how the Bedini machine can be described mathematically. Of course, this rational relies on a unified field theory to explain the operation. His "paper 94", when is available publicly, should be available from his website:

Direct link Spin Connection Resonance in the Bedini Machine

Electro-chemical effect seen happening in the Battery

The SG can be driven by some free energy source e.g. PV panels or a water turbine or an aerial in the air absorbing free electrons or whatever. What an SG does is alter itself to match the load which a solid state device cannot (or at least readily). The right balance of current and HV pulses can induce a self charging process in a flooded cell

battery – we have evidence of this. JB is right whatever it is that is happening is happening in the battery but it seems to be purely electro-chemical in nature. One engineer has done one simple chemical analysis of the Bedini process. Using a small glass container a lead acid battery cell was created with replaceable electrodes. The engineer then applied two different signals to the cell generated by generator coils on a monopole rotor. The results showed that HV impulse charging of a lead acid cell produces dendrite growths of probably Lead Tetroxide (red lead) on the Anode, as well as the usual Lead Dioxide dendrites on the cathode. **This shows proof that there is a chemical reaction and or physical proof of phenomena happening.** Credits for the following thesis, go to David Rogers and John Bedini.

John's comments –Dave, I have followed your work on this cell. This proves what I have been saying all along as I have taken batteries apart to find the same thing. You need to look at the lattice structure; you will find that a new crystal is being formed on those plates, fern like patterns.

This is where the extra energy is developed in the battery; this is only produced by a sharp gradient, the spike. This only happens with a mass-less charge, earth batteries do the same thing, they grow in power.

I have looked over all the replications in this group that were posted; I only find some things where I would not do it that way. Closed loop systems will never go over unity. I must state the 1 ohm test is not in series with the battery. The two forms of energy cannot be mixed as this counter acts the gain in the battery.

Paper by David Rogers –Plante Cell observations

OTG - Experimental Plante Cell observations2 - DMR08

David's preliminarily tests on a water cell with copper electrodes

Comment by john Bedini-Battery charging, chemical reaction. When charging a source such as pure DC, or a battery charger is charging the battery, the SO4 comes off both plates and joins with the H in the electrolyte to form H2SO4. The H2O breaks up and the O goes to the positive plate, where it joins with the Pb to form lead peroxide (PbO2). This is very important.

Battery discharging,The chemical action in a battery while discharging joins with the Pb to form lead sulfate (PbSO)on both plates. The O, on the positive plates join with the Hydrogen (H) in the electrolyte to form (H2O) As the battery discharges, the percentage of water in the electrolyte contains high percentage of H2O. The electrolyte is a mixture of approximately 64 percent water (H2O) and 36 percent sulfuric acid (H2SO4).

Do the experiment and watch what happens. Take two pieces of lead, place them in a jar of some type, apply a small current, the positive plate will build lead peroxide (PbO2) without this you will not have a battery, the negative plate will be sponge lead. This only takes 10 minutes to see what is going on.

The crude way to make acid, if you wanted to make your own H2SO4 get sulfur and boil in a test tube, then run the gas through distilled water in another bottle, the final product is H2SO4. I think you will find Dave's cell working this way.- John

Video by John and Rick on Battery Forming –John Bedini and Rick Friedrich show how some basic batteries are formed with lead and paste and acid. You can see how sulfation occurs on the plates, and how the Bedini charging reduces sulfation and the ruin of the plates. Acid is drained in the one cell and Alum with water is replaced. Two batteries are shown that run just as good with Alum instead of acid.

Technical discussion on the Bedini process by members of the energetic forum

The Bedini circuits are GAS VALVES for the aetheric gas. The voltage potential moves like a gas under pressure. When it leaves the coil through the diode to the secondary battery, it will accept this voltage potential in a way dependent on how full or empty it is. The larger the battery, the less impedance (back pressure – not same as back emf, etc...). The larger an exhaust you have on a car, the easier the exhaust can leave the engine and the engine can turn easier. If you have a small battery on output with very high impedance, that is like having a pea shooter exhaust or putting your foot over it. You will prevent the gas from coming out as easy and can bog down or slow down the motor.

A capacitor for example fills with this gas. This is very literal and not just an analogy. The higher it is charged...it becomes more difficult to pump more into it. When the cap is at "above" capacity...some will leak out and dissipate back to the vacuum until it settles down a bit. If you look at these motors and the potential like this, a lot of things reveal themselves. The secondary battery is isolated somewhat but is still not an isolated winding like a trifilar where a 3rd wire is send to a battery via caps or other means.

Counter or Back EMF is Lenz's law in play. The Bedini SG's switch in and out of Lenz's law. Any back emf that could happen happens during the applied pulse and this is what prevents the primary coil from charging as fast as a coil can discharge. After the back emf effect is finished – it is finished when the coil is turned off and then the collapsed field moves through the diode to secondary. You might already know but the back emf event comes first then the collapse comes second. Some people thing back emf is the collapsed field but it isn't. There isn't the same back emf on the collapse and that is why it can collapse at ridiculous speeds because no back emf holding it back.

I get great results mixing all kinds of batts on input and output. But having the same allows a balancing of impedance, which someone else can probably comment in depth on this. In Bedini's 1984 book, he talks some about charging the battery and resonance.

First we look at how I understand Radiant Energy behaves:

Radiant Energy behaves as a gas

Radiant Energy moves in the opposite direction to electron current flow (thus AKA Negative Energy)

Radiant Energy manifests before current

A Radiant Event occurs when you rapidly create a dipole

One understanding of Radiant Energy

When a circuit is switched on a dipole is immediately formed between the negative and positive of the battery terminals. This creates a Radiant Event. Radiant Energy, travelling at extreme speeds, emits from the Negative of the battery and moves towards the Positive travelling along the outside of the wire. When it reaches the positive some of its energy is l to the electrons in the circuit and they move in the opposite direction along the edges of the wire thus producing current. The current then reaches the negative of the battery and kills the dipole and the radiant event is over.

How Does Radiant Energy Behave In The Bedini SSG?

Since Radiant Energy behaves as a gas and moves in the opposite direction to the electron current flow we can now see how the Bedini Circuit behaves. When the transistor turns on the radiant event occurs and floods the circuit from the negative to the positive of the primary battery. Because it behaves like a gas under pressure it happily floods the positive of the charging battery as it makes it's way to the negative of the primary battery. (The 1N4007 diode is not an obstacle because it is moving in the opposite direction to electron current flow .) The positive of the charging battery acts as a 127eservoir for the radiant energy. The higher the Ah and V of the charging battery, the larger the 127eservoir.

Then the current is formed and quickly disipitates the Radiant Energy, briefly creating a "potential vacuum" in the positive of the charging battery. This vacuum hungers for electrons which it takes from anywhere they are available; the air, the earth AND the incoming current flow for the primary battery! This would explain why current increases

when a charging battery is attached. Electrons are being intercepted from the current going to the negative of the primary battery after the radiant event.

The transistor then turns off and there will then be a current flowing flowing from the negative of the charging battery to the positive as it tries to fully compensate for the potential vacuum. This is helped by the induced current in the power coil from the incoming magnet on the rotor.

There are 3 flows in a circuit.

1. Positive "Heaviside flow" going from pos terminal of source battery over the wire towards the negative terminal of the same battery.

2. Negative anti-photon potential going from neg terminal of source battery over the wire towards the positive terminal of the same battery.

3. Electrons that are induced into movement when the positive Heaviside flow moving over the wire is diverged into the copper atoms causing an electron in the 3rd electron field of a copper atom to jump orbit to the next atom and the next and the next moving TOWARDS the positive terminal. This happens if the loop is closed long enough. With current the electron flow is a few inches per hour.

The positive potential flow and the negative potential flow both act like a gas under pressure and each one has opposite charges. In some models, the "aether" is and/or composed of neutral particles.

The Heaviside flow is named after Oliver Heaviside. In conventional science, you will hear of the "Poynting Flow." Poynting explained that the energy flow over a wire incorrectly. He said that only the potential that is being used is significant and all else is irrelevant. Bearden's analogy: If there is a sailboat on the water, only the wind that hits the sail is relevant and none of the other wind has any significance. Therefore, all that extra wind was discarded in the math, etc...

So, when calculating the energy potential over a circuit, according to Poynting is just a little bit that is being used...that is like saying that if you take a cup and scoop water from a river that the only potential that is there is what is in the cup and the rest of the river is irrelevant.

The Heaviside Flow is talking about the entire energetic flow of potential over a wire...accounting for the whole river of energy potential. 10 to the -13th power or 1/11 trillionths (if I did that right)...is all that is intercepted into the copper atoms in the wire from the Heaviside flow...IMAGINE THAT... 1/11 trillionths... that is one approximation.

Can you see how much is not even being used? At least this is the case in a closed loop when you have electron current. This is why it has been said that a small AA battery could power an entire battleship. It isn't necessarily a problem of having access to the potential...but it more how can you take advantage of all the potential that nature is pouring out for us to use.

The Heaviside flow I believe is normally referring to the positive potential that is moving over the wire from pos terminal of the source dipole towards the negative terminal on the source dipole. It has a "twin" anti flow coming at it from the opposite direction. So, you can utilize the positive potential or you can take advantage of the negative potential side of it depending on how the circuit is wired.

Paper 2 stage inductance – by Sephiroth

File -Two Stage Inductance

Faculty Links

John's back round on radiant energy

http://www.fight-4-truth.com/Schematics.html

Explanation of John Bedini's Formation of Negative Resistors in Batteries

BEDINI'S METHOD FOR FORMING NEGATIVE RESISTORS IN BATTERIES-Thomas E. Bearden

Collection of John Bedini's posts form the forums

John Bedini interview WITH DR. BOB HIERONIMUS

http://www.eee.strath.ac.uk/ug-info/19222/Lectures_notes2004/19222_1_electromagnetism.pdf

http://www.tinaja.com/glib/muse117.pdf

Strange effects in the components of Bedinichargers

Patent Information

"Tesla's US Patent #685,958 clearly shows radiant energy circuits designed to run INDUCTIVE loads. Gray's US Patent #4,595,975 shows radiant energy, again, driving INDUCTIVE loads.""John Bedini has now moved the science of radiant energy one step farther by discovering how radiant energy can be captured in CHEMICAL loads, such as the electrolyte of a battery.

Rex Research

Bedini Patent Animated ver. 1.0

Videos

http://www.youtube.com/user/theDaftman

http://www.youtube.com/user/shannrenn

http://www.youtube.com/user/plengo

http://au.youtube.com/user/mcorrade

Technical support groups

http://groups.yahoo.com/group/Bedini_Monopole/
http://groups.yahoo.com/group/bedini_monopole2/

http://groups.yahoo.com/group/bedini_monopole3/
http://rpmgt.org/JoinBediniList.htm

http://freeenergy.freeforums.org/index.php

http://teep.forumco.com/default.asp

http://imhotepslabs.freeforums.org/

Links

Jason Wolf's page on John Bedini technology

Energetic Science ministries link resource on John Bedini

Separating Neo magnets

Marcia's Correspondence with Tom Beardon about the Fan kit being OU

Credits

The open source energy community

If you are able to contribute to this document in ANY way, IE- replication details, faculty info and or additional data please contact the non profit organization.

http://www.panacea-bocaf.org

http://www.panaceauniversity.org